PMC-340
Digital Three-Phase Energy Meter



The PMC-340 Digital Three-Phase Energy Meter is CET's latest offer for the low voltage power/energy metering market featuring DIN rail mount, high accuracy, multifunction measurements and a large, easy to read 7-segment LCD display. The PMC-340 complies with the IEC 62053-21 Class 1 and IEC 62053-22 Class 0.5S kWh Accuracy Standards for 100A Direct Input and 5A CT Input, respectively. The PMC-340 comes standard with a LED as well as a Solid State Pulse Output for energy pulsing. The standard RS485 port and Modbus protocol support allows the PMC-340 to become a vital component of an intelligent, multifunction monitoring solution for any Power and Energy Management Systems.

Typical Applications

- DIN rail mount energy metering
- Industrial and commercial metering
- Substation, building and factory automation
- Sub-metering
- Power quality monitoring

Features Summary

Ease of use

- Easy to read 7-segment LCD
- Two LED indicators for energy pulsing and communication activities
- Password-protected setup via front panel or free PMC Setup software
- Easy installation with DIN rail mounting, no tools required
- 3-phase power supply, no external control power required

Basic Measurements

- Multifunction measurements
  - Voltage, Current, kW, kvar, kVA, PF and Frequency
  - kWh and kvarh Imp/Exp/Tot/Net and kVAh
  - Per phase kWh and kvarh Imp/Exp/Tot/Net and kVAh
  - Voltage/Current THD, THOD, THED, Unbalance and K Factor
  - Individual harmonics up to 31st
  - kW/kvar/kVA Total Demands and Max. Demands
  - Per Phase Current Demands and Max. Demands
  - Min/Max Log
- Two TOU schedules, each providing
  - 12 Seasons
  - 20 Daily Profiles, each with 12 Periods in 15-minute interval
  - 90 Holidays or Alternate Days
  - 4 Tariffs, each providing the following information
    - kWh/kvarh Import/Export
    - kW/kvar/kVA Total Demands and Max. Demands
- 12 monthly recording of all Energy parameters

Digital Inputs (Optional)

- 3 channels for external status monitoring and pulse counting
- Self-excited, internally wetted at 24VDC
- 1000Hz sampling

Pulse Outputs

- 1 LED Pulse Output on the front panel for energy pulsing application
- 1 Solid State Digital Output for energy pulsing application

Communications

- Optically isolated RS485 port, baud rate from 1200 to 38400bps
- Modbus RTU protocol

Real-time Clock

- Battery-backed real-time clock @ 6ppm
- Clock error ≤ 0.5s/day
- Can be set through front panel or communications

System Integration

- Supported by our PecStar® iEMS and PMC Setup
- Easy integration into other Automation or SCADA systems via Modbus RTU protocol

Accuracy

Parameters	Accuracy	Resolution
Voltage	±0.5%	0.1V
Current	±0.5%	0.001A
kW, kvar, kVA	±1%	0.001kW/kvar/kVA
kWh, kVAh	IEC 62053-21 Class 1 for Direct Input	0.1kWh
	IEC 62053-22 Class 0.5S for 5A CT Input	
kvarh	IEC 62053-23 Class 2	0.1kvarh
P.F.	±1%	0.001
Frequency	±0.02Hz	0.01Hz
Harmonics	IEC 61000-4-7 Class B	0.1%

Terminals

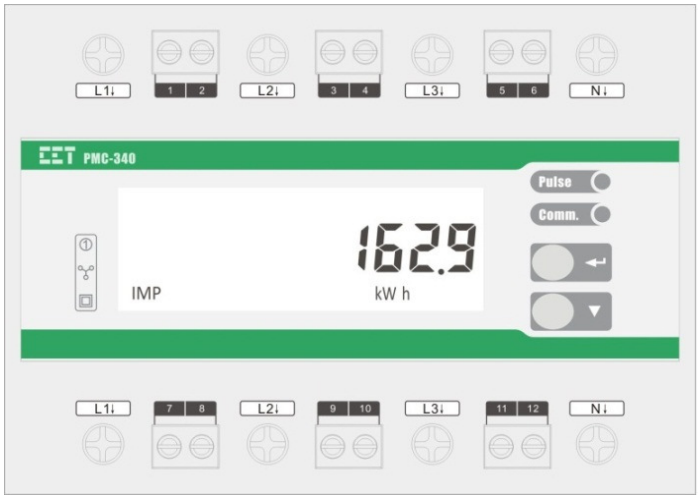

Dimensions and Installation

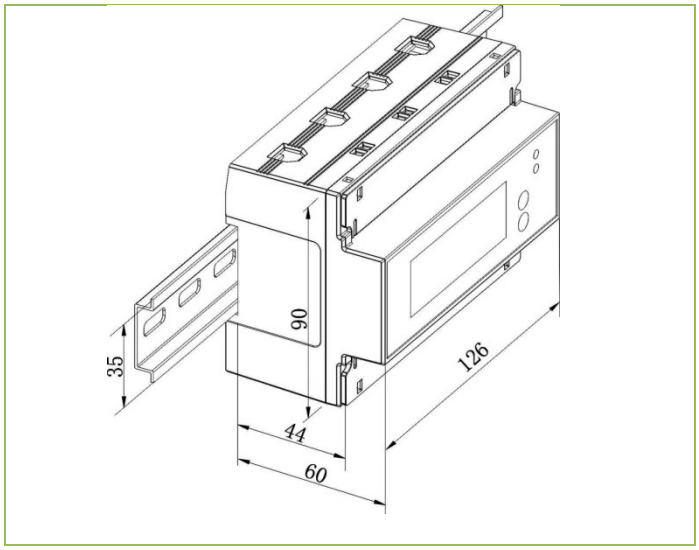

Designed For Reliability *Manufactured To Last*

PMC-340
Digital Three-Phase Energy Meter

Technical Specifications

Inputs (L1, L2, L3, N)	
Voltage (Un)	240VLN
Range	0.7 to 1.1 Un
Burden	<3VA/phase
Direct Input	
Current (Ib/Imax)	20A/100A
Range	0.4% Ib to Imax
Starting Current	0.4% Ib
Burden	<4VA/phase
Wire Size	Maximum 35mm^2 (3 AWG)
Torque for terminals	2.5 N.m
CT Input	
Current (In/Imax)	5A/6A
Range	(0.1%-120%) In
Starting Current	0.1% In
Burden	<0.5VA/phase
Frequency	45Hz-65Hz
Solid State Energy Pulse Output (Selectable - kWh/kvarh)	
Pulse constant	1/10/100/1000/3200 imp/kWh (imp/kvarh)
Isolation	Optical
Max. Load Voltage	80V
Max. Forward Current	50mA
Pulse Width	60-150ms
Communications	
RS-485	Modbus RTU
Baudrate	1200/2400/4800/9600/19200 bps
Maximum Wire Size	1.5mm^2 (16AWG)
Torque for Terminals	0.45 N.m
Environmental conditions	
Operating temp.	-25°C to +70°C
Storage temp.	-40°C to +85°C
Humidity	5% to 95% non-condensing
Atmospheric pressure	70 kPa to 106 kPa
Pollution Degree	2
Mechanical Characteristics	
Mounting	DIN Rail
Unit Dimensions	126x90x60mm
Shipping Dimensions	TBD
Shipping Weight	TBD
IP Rating	51

Ordering Information

Ceiec Electric Technology

Version 20151120

Product Code	Description
PMC-340 Three-Phase DIN Energy Meter	
Basic Function	
A	3-phase real-time multi-function parameters
Input Current	
A	20A (100A), Direct Input
B	5A (6A), CT Input
Input Voltage	
3	240VLN/415VLL
System Frequency	
5	50Hz
6	60Hz
DO	
A	1xSS Pulse Output for Energy Pulsing
DI	
X	None
A	3xDI for Pulse Counting
Communications	
A	1 RS-485 Port
Display Language	
E	English

PMC-340	-	A	A	3	5	A	X	A	E	PMC-340-AA35AXAE (Standard Model)

Standards of Compliance

Safety Requirements		
CE LVD 2006/95/EC		EN61010-1-1-2001
Insulation		IEC 60255-5-2000
Dielectric test		2kV @ 1 minute
Insulation resistance		>100MΩ
Impulse voltage		6kV, 1.2/50μs
Electromagnetic Compatibility CE EMC Directive 2004/108/EC (EN 61326: 2006)		
Immunity Tests		
Electrostatic discharge		IEC 61000-4-2:2001 Level IV
Radiated fields		IEC 61000-4-3:2002 (10 V/m)
Fast transients		IEC 61000-4-4:2004 Level IV
Surges		IEC 61000-4-5:2005 Level IV
Conducted disturbances		IEC 61000-4-6:2006 Level III
Magnetic Fields		IEC 61000-4-8:2009 Level IV
V dips, interruptions & variations		IEC 61000-4-11:2004 (?)
Oscillatory waves		IEC 61000-4-12:2006 Level III
Radio Disturbances		CISPR 22:2006, Level B
Emission Tests		
Limits and methods of measurement of electromagnetic disturbance characteristics of industrial, scientific and medical (ISM) radio-frequency equipment		EN 55011: 2009 (CISPR 11)
Limits and methods of measurement of radio disturbance characteristics of information technology equipment		EN 55022: 2006+A1: 2007 (CISPR 22)
Limits for harmonic current emissions for equipment with rated current ≤16 A		EN 61000-3-2: 2006+A1: 2009
Limitation of voltage fluctuations and flicker in low-voltage supply systems for equipment with rated current ≤16 A		EN 61000-3-3: 2006
Emission standard for residential, commercial and light-industrial environments		EN 61000-6-3: 2007
Electromagnetic Emission Tests for Measuring Relays and Protection Equipment		IEC 60255-25: 2000
Mechanical Tests		
Vibration Test	Response	IEC 62052-11: 2003 Level I
	Endurance	IEC 62052-11: 2003 Level I
Shock Test	Response	IEC 62052-11: 2003 Level I
	Endurance	IEC 62052-11: 2003 Level I
Bump Test		IEC 62052-11: 2003 Level I

CETA Australia Pty Ltd
38b Douglas Street, Milton QLD 4064
P.O. Box 1486, Milton QLD 4064
t: +61 7 3535 9600
f: +61 7 3535 9601
e: sales@cetameter.com
w: www.cetameter.com

Your Local Representative

Preliminary Revision Date: November 20, 2015

Designed For Reliability *Manufactured To Last*