Together we can make a difference.™

origin

Sharp3000 3kW Solar System Panel Specifications

Your Sharp system will be supplied with one of the following sets of panels:

Manufacturer	Mono Or Poly	Size (Watts)	Panels Required To Achieve Minimum 3000 Watts
Sharp	Poly	215	14
Sharp	Poly	220	14

Please note all solar panels supplied are CEC accredited and compliant with IEC/EN61730 and IEC/EN61215 or IEC/EN61646.

The choice of panels will be at the **sole discretion** of our installer subject to such matters as stock availability.

Please see the following specification sheet for further details and panel specifications.

215 WATT



BIG POWER, SMALL FOOTPRINT

MULTI CRYSTAL SILICON PHOTOVOLTAIC MODULE WITH 215W MAXIMUM POWER

This multi crystal 215watt module features 14.6% encapsulated cell efficiency and 13.1% module efficiency. Using breakthrough technology perfected in Sharp's space cell program, the **ND-A215A2** module allows for maximum usable power per square metre of solar array.

A safe, clean, reliable source of energy, Sharp's ND-A215A2 photovoltaic module is designed for large electrical power requirements. Based on the technology of crystal silicon solar cells developed over 50 years, this module has superb durability to withstand rigorous operating conditions and is suitable for grid connected systems.

Common applications for the Sharp ND-A215A2 include residences, office buildings, solar power stations and solar suburbs. As one of the world's leading manufacturer of photovoltaic modules, Sharp produces an extensive line of high power modules for every electrical power requirement.

FEATURES

- High-power module (215W) using 156.5mm square multi crystal silicon solar cells with 13.1% module conversion efficiency
- Photovoltaic module with bypass diode minimises the power drop caused by shade
- Textured cell surface to reduce the reflection of sunlight and BSF (Back Surface Field) structure to improve cell conversion efficiency: 14.6%
- White tempered glass, EVA resin and a weatherproof film, plus aluminum frame for extended outdoor use
- Output terminal: Lead wire with waterproof connector
- Certifications: IEC 61215 & IEC 61730
- SHARP modules are manufactured in ISO 9001 certified factories

SHARP

ND-A215A2 – MAXIMUM POWER

ELECTRICAL CHARACTERISTICS

Cell	156.5mm Square Polycrystalline silicon
No. of Cells and Connections	60 in series
Open Circuit Voltage (Voc)	36.7V
Maximum Power Voltage (Vpm)	30.2V
Short Circuit Current (Isc)	7.82A
Maximum Power Current (Ipm)	7.13A
Maximum Power (Pm)[1]	Typical 215W
Encapsulated Solar Cell Efficiency (ηc)	14.6%
Module Efficiency (ηm)	13.1%
Maximum System Voltage	DC 1000V
Series Fuse Rating	15A
Type of Output Terminal	Lead Wire with MC3 Connector

Specifications are subject to change without notice
[1] (STC) Standard Test Conditions: 25˚C, 1 kW/m², AM 1.5

MECHANICAL CHARACTERISTICS

Dimensions	994 x 1652 x 46mm
Weight	21.0kg

TEMPERATURE COEFFICIENT

Temp. Coefficient of Pmax	-0.485	% / ˚C
Temp. Coefficient of Voc	-0.13	V / ˚C
Temp. Coefficient of Isc	0.053	% / ˚C

ABSOLUTE MAXIMUM RATINGS

Parameters	Rating	Unit
Operating Temperature	-40 to +90	˚C
Storage Temperature	-40 to +90	˚C
Dielectric Voltage Withstood	3000 max.	V-DC

IV CURVES

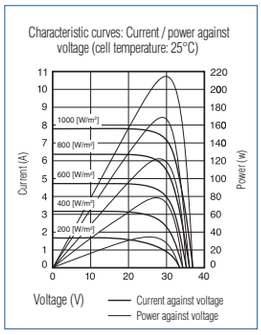

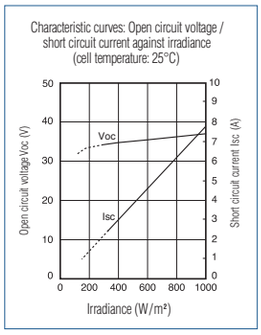

Specifications are subject to change without notice

DIMENSIONS

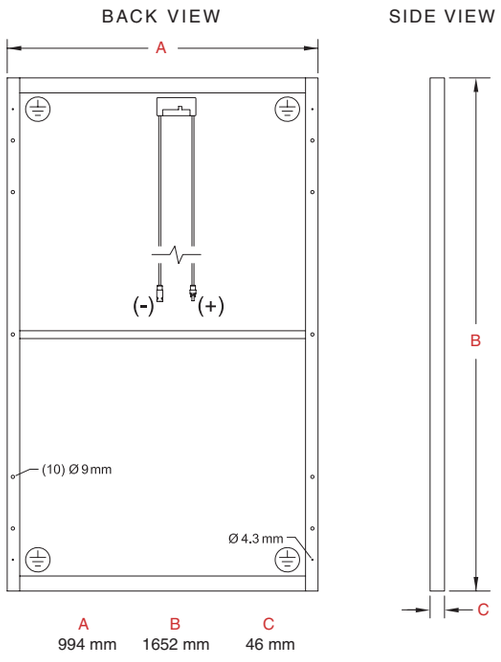

Specifications are subject to change without notice

In the absence of confirmation by device specifications sheets, Sharp takes no responsibility for any defects that may occur in equipment using any Sharp devices shown in catalogues, data books, etc. Contact Sharp in order to obtain the latest device specification sheets before using any Sharp device.

- Design and specifications are subject to change without prior notice.
- Colour variations to products may occur due to printing.
- All information and technical details are correct as at product release date.

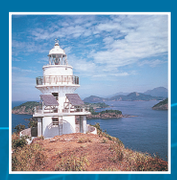





SHARP CORPORATION OF AUSTRALIA PTY LTD
ABN 40 003 039 405
1 Huntingwood Drive, Huntingwood, NSW 2148
PO Box 6827, Blacktown, NSW 2148
Tel: (02) 9830 4600 Fax: (02) 9672 1208
www.sharp.net.au

© SHARP CORP. PRINTED IN AUSTRALIA

220 WATT



BIG POWER, SMALL FOOTPRINT

MULTI CRYSTAL SILICON PHOTOVOLTAIC MODULE WITH 220W MAXIMUM POWER

This multi crystal 220watt module features 15% encapsulated cell efficiency and 13.4% module efficiency. Using breakthrough technology perfected in Sharp's space cell program, the **ND-220E1J** module allows for maximum usable power per square metre of solar array.

A safe, clean, reliable source of energy, Sharp's ND-220E1J photovoltaic module is designed for large electrical power requirements. Based on the technology of crystal silicon solar cells developed over 50 years, this module has superb durability to withstand rigorous operating conditions and is suitable for grid connected systems.

Common applications for the Sharp ND-220E1J include residences, office buildings, solar power stations and solar suburbs. As one of the world's leading manufacturer of photovoltaic modules, Sharp produces an extensive line of high power modules for every electrical power requirement.

FEATURES

- High-power module (220W) using 156.5mm square multi crystal silicon solar cells with 13.4% module conversion efficiency
- Photovoltaic module with bypass diode minimises the power drop caused by shade
- Textured cell surface to reduce the reflection of sunlight and BSF (Back Surface Field) structure to improve cell conversion efficiency: 15%
- White tempered glass, EVA resin and a weatherproof film, plus aluminum frame for extended outdoor use
- Output terminal: Lead wire with waterproof connector
- Certifications: IEC 61215 & IEC 61730
- SHARP modules are manufactured in ISO 9001 certified factories

SHARP

ND-220E1J – MAXIMUM POWER

ELECTRICAL CHARACTERISTICS

Cell	156.5mm Square Polycrystalline silicon
No. of Cells and Connections	60 in series
Open Circuit Voltage (Voc)	36.5V
Maximum Power Voltage (Vpm)	29.2V
Short Circuit Current (Isc)	8.20A
Maximum Power Current (Ipm)	7.54A
Maximum Power (Pm)[1]	Typical 220W
Encapsulated Solar Cell Efficiency (ηc)	15%
Module Efficiency (ηm)	13.4%
Maximum System Voltage	DC 1000V
Series Fuse Rating	15A
Type of Output Terminal	Lead Wire with MC3 Connector

Specifications are subject to change without notice
[1] (STC) Standard Test Conditions: 25˚C, 1 kW/m², AM 1.5

MECHANICAL CHARACTERISTICS

Dimensions	994 x 1652 x 46mm
Weight	21.0kg

TEMPERATURE COEFFICIENT

Temp. Coefficient of Pmax	-0.485	% / ˚C
Temp. Coefficient of Voc	-0.13	V / ˚C
Temp. Coefficient of Isc	0.053	% / ˚C

ABSOLUTE MAXIMUM RATINGS

Parameters	Rating	Unit
Operating Temperature	-40 to +90	˚C
Storage Temperature	-40 to +90	˚C
Dielectric Voltage Withstood	3000 max.	V-DC

IV CURVES

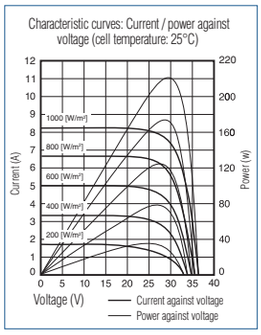

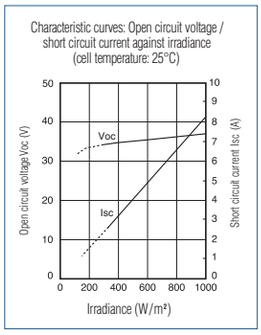

Specifications are subject to change without notice

DIMENSIONS

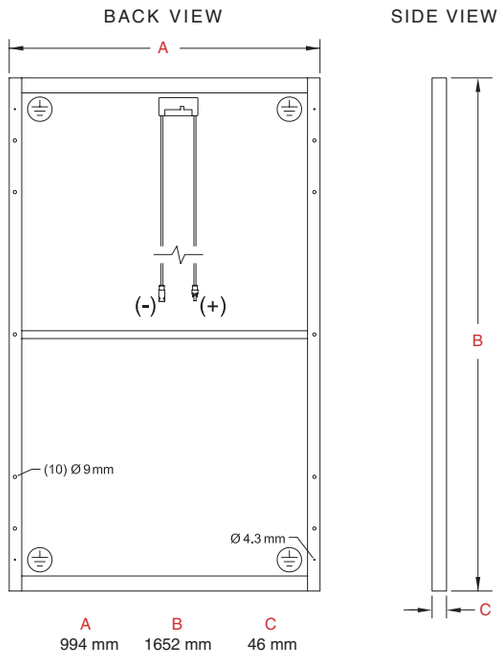

A	B	C
994 mm	1652 mm	46 mm

Specifications are subject to change without notice

In the absence of confirmation by device specifications sheets, Sharp takes no responsibility for any defects that may occur in equipment using any Sharp devices shown in catalogues, data books, etc. Contact Sharp in order to obtain the latest device specification sheets before using any Sharp device.

- Design and specifications are subject to change without prior notice.
- Colour variations to products may occur due to printing.
- All information and technical details are correct as at product release date.

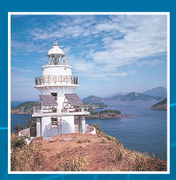





SHARP CORPORATION OF AUSTRALIA PTY LTD
ABN 40 003 039 405
1 Huntingwood Drive, Huntingwood, NSW 2148
PO Box 6827, Blacktown, NSW 2148
Tel: (02) 9830 4600 Fax: (02) 9672 1208
www.sharp.net.au

© SHARP CORP. PRINTED IN AUSTRALIA