SUNGROW
Clean power for all

PV Grid-Connected Inverter
User Manual
SG110CX



All Rights Reserved

All Rights Reserved

No part of this document can be reproduced in any form or by any means without the prior written permission of Sungrow Power Supply Co., Ltd (hereinafter "SUNGROW").

Trademarks

SUNGROW and other Sungrow trademarks used in this manual are owned by SUNGROW.

All other trademarks or registered trademarks mentioned in this manual are owned by their respective owners.

Software Licenses

- It is prohibited to use data contained in firmware or software developed by SUNGROW, in part or in full, for commercial purposes by any means.
- It is prohibited to perform reverse engineering, cracking, or any other operations that compromise the original program design of the software developed by SUNGROW.

About This Manual

The manual mainly contains the product information, as well as guidelines for installation, operation and maintenance. The manual does not include complete information about the photovoltaic (PV) system. The reader can get additional information about other devices at **www.sungrowpower.com** or on the webpage of the respective component manufacturer.

Validity

This manual is valid for the following inverter models:

- SG110CX

They will be referred to as "inverter" hereinafter unless otherwise specified.

Target Group

This manual is intended for inverter owners who will have the ability to interact with the inverter and qualified personnel who are responsible for the installation and commissioning of the inverter. Qualified personnel should have the following skills:

- Training for installation and commissioning of electrical system, as well as dealing with hazards
- Knowledge of the manual and other related documents
- Knowledge of the local regulations and directives

How to Use This Manual

Read the manual and other related documents before performing any work on the inverter. Documents must be stored carefully and be available at all times.

Contents may be periodically updated or revised due to the product development. The manual content of subsequent versions of the inverter may be subject to change. The latest manual can be found at **support.sungrowpower.com**.

Symbols

Important instructions contained in this manual should be followed during installation, operation and maintenance of the inverter. They will be highlighted by the following symbols.

⚠ DANGER

Indicates a hazard with a high level of risk that, if not avoided, will result in death or serious injury.

⚠ WARNING

Indicates a hazard with a medium level of risk that, if not avoided, could result in death or serious injury.

⚠ CAUTION

Indicates a hazard with a low level of risk that, if not avoided, could result in minor or moderate injury.

NOTICE

Indicates a situation that, if not avoided, could result in equipment or property damage.

Indicates additional information, emphasized contents or tips that may be helpful, e.g. to help you solve problems or save time.

Contents

All Rights Reserved I
About This Manual II
1 Safety 1
1.1 PV Panels 1
1.2 Utility Grid 1
1.3 Inverter 2
2 Product Description 4
2.1 System Introduction 4
2.2 Product Introduction 5
2.3 Symbols on the Product 7
2.4 LED Indicator 7
2.5 DC Switch 8
2.6 Circuit Diagram 8
2.7 Function Description 9
3 Unpacking and Storage 11
3.1 Unpacking and Inspection 11
3.2 Inverter Storage 11
4 Mechanical Mounting 12
4.1 Safety during Mounting 12
4.2 Location Requirements 12
4.2.1 Environment Requirements 13
4.2.2 Carrier Requirements 13
4.2.3 Angle Requirements 13
4.2.4 Clearance Requirements 14
4.3 Installation Tools 15
4.4 Moving the Inverter 17
4.4.1 Manual Transport 17
4.4.2 Hoisting Transport 18
4.5 Installing the mounting-bracket 19
4.5.1 PV Bracket-Mounted Installation 19
4.5.2 Wall-Mounted Installation 20

4.6 Installing the Inverter 21
5 Electrical Connection 23
5.1 Safety Instructions 23
5.2 Terminal Description 23
5.3 Electrical Connection Overview 25
5.4 Crimp OT/DT terminal 27
5.5 External Grounding Connection 28
5.5.1 External Grounding Requirements 28
5.5.2 Connection Procedure 29
5.6 Opening the Wiring Compartment 29
5.7 AC Cable Connection 30
5.7.1 AC Side Requirements 30
5.7.2 Requirements for OT/DT Terminal 32
5.7.3 Connection Procedure(For a multi-core cable) 32
5.7.4 Connection Procedure(L1/L2/L3/N, For four single-core cables) 35
5.7.5 Connection Procedure(L1/L2/L3/PE, For four single-core cables) 37
5.8 DC Cable Connection 40
5.8.1 PV Input Configuration 40
5.8.2 Assembling the PV Connectors 41
5.8.3 Installing the PV Connector 43
5.9 RS485 Connection 44
5.9.1 Interface Description 44
5.9.2 RS485 Communication System 45
5.9.3 Connection Procedure(Terminal Block) 47
5.9.4 Connection Procedure (RJ45 Ethernet Port) 48
5.10 Dry Contact Connection 50
5.10.1 Dry Contact Function 50
5.10.2 Wiring Procedure 52
5.11 DRM Connection (For Countries “AU” and “NZ”) 52
5.11.1 DRM Function 52
5.11.2 Connection Procedure 53
5.12 Closing the Wiring Compartment 54
5.13 Communication Module Connection (optional) 54
6 Commissioning 56
6.1 Inspection before Commissioning 56

6.2 Commissioning Procedure 56
7 iSolarCloud App 57
7.1 Brief Introduction 57
7.2 Installing the App 57
7.3 Function Overview 58
7.4 Login 58
7.4.1 Requirements 58
7.4.2 Login Procedure 58
7.5 Home page 62
7.6 Run Information 65
7.7 Records 66
7.8 More 68
7.8.1 System Parameters 68
7.8.2 Operation Parameters 69
7.8.3 Power Regulation Parameters 71
7.8.4 Communication Parameters 76
7.8.5 Firmware Update 77
7.8.6 Password Changing 78
8 System Decommissioning 80
8.1 Disconnecting the Inverter 80
8.2 Dismantling the Inverter 80
8.3 Disposal of the Inverter 81
9 Troubleshooting and Maintenance 82
9.1 Troubleshooting 82
9.2 Maintenance 91
9.2.1 Maintenance Notices 91
9.2.2 Routine Maintenance 92
9.2.3 Cleaning Air Inlet and Outlet 92
9.2.4 Fan Maintenance 93
10 Appendix 95
10.1 Technical Data 95
10.2 Wring Distance of DI Dry Contact 96
10.3 Quality Assurance 98
10.4 Contact Information 98

1 Safety

The device has been designed and tested strictly according to international safety regulations. Read all safety instructions carefully prior to any work and observe them at all times when working on or with the device.

Incorrect operation or work may cause:

- Injury or death to the operator or a third party;
- Damage to the device and other properties.

All detailed work-related safety warnings and notes are specified at critical points in this manual.

- The safety instructions in this manual cannot cover all the precautions that should be followed. Perform operations considering actual onsite conditions.
- SUNGROW shall not be held liable for any damage caused by violation of the safety instructions in this manual.
- When installing, operating, and maintaining the device, comply with local laws and regulations. The safety precautions in this manual are only supplements to local laws and regulations.

1.1 PV Panels

DANGER

PV strings will produce electrical power when exposed to sunlight and can cause a lethal voltage and an electric shock.

- **Always keep in mind that the inverter is dual power supplied. Electrical operators must wear proper personal protective equipment: helmet, insulated footwear, gloves, etc.**
- **Before touching the DC cables, operator must use a measuring device to ensure that the cable is voltage-free.**
- **The operator must follow all warnings on the PV strings and in its manual.**

1.2 Utility Grid

Follow the regulations related to the utility grid.

NOTICE

All electrical connections must be in accordance with local and national standards. Only with the permission of the local utility grid company, the inverter can be connected to the utility grid.

1.3 Inverter

⚠ DANGER

Danger to life from electric shocks due to live voltage

Do not open the enclosure at any time. Unauthorized opening will void warranty and warranty claims and in most cases terminate the operating license.

⚠ WARNING

Risk of inverter damage or personal injury

- **Do not connect or disconnect the PV and AC connectors when the inverter is running.**
- **Wait at least 5 minutes for the internal capacitors to discharge after all electric devices are removed and the inverter is powered off.**
- **Ensure that there is no voltage or current before connecting or disconnecting the PV and AC connectors.**

⚠ WARNING

All safety instructions, warning labels, and nameplate on the inverter:

- **Must be clearly legible.**
- **Should not be removed or covered.**

⚠ CAUTION

Risk of burns due to hot components!

Do not touch any hot parts (such as the heat sink) during operation. Only the DC switch can safely be touched at any time.

NOTICE

Only qualified personnel can perform the country setting. Unauthorized alteration may cause a breach of the type-certificate marking.

Risk of inverter damage due to electrostatic discharge (ESD)!

By touching the electronic components, you may damage the inverter. For inverter handling, be sure to:

- **avoid any unnecessary touching;**
- **wear a grounding wristband before touching any connectors.**

2 Product Description

2.1 System Introduction

The inverter is a transformerless 3-phase PV grid-connected inverter. As an integral component in the PV power system, the inverter is designed to convert the direct current power generated from the PV modules into grid-compatible AC current and to feed the AC current into the utility grid.

The intended usage of the inverter is illustrated in the following figure.



figure 2-1 Inverter Application in PV Power System

⚠ WARNING

The inverter must not be connected to a PV string that requires positive or negative grounding.

Do not connect any local load between the inverter and the AC circuit breaker.

During the installation and operation of the inverter, please ensure that the positive or negative polarities of PV strings do not short-circuit to the ground. Otherwise, an AC or DC short-circuit may occur, resulting in equipment damage. The damage caused by this is not covered by the warranty.

Item	Description	Note
A	PV strings	Monocrystalline silicon, polycrystalline silicon and thin-film without grounding.
B	Inverter	SG110CX
C	Grid connection cabinet	Includes devices such as AC circuit breaker, SPD, metering device.
D	Transformer	Boost the low voltage from the inverter to grid-compatible medium voltage.
E	Utility grid	TN-C, TN-S, TN-C-S, TT, IT.

The following figure shows the common grid configurations.

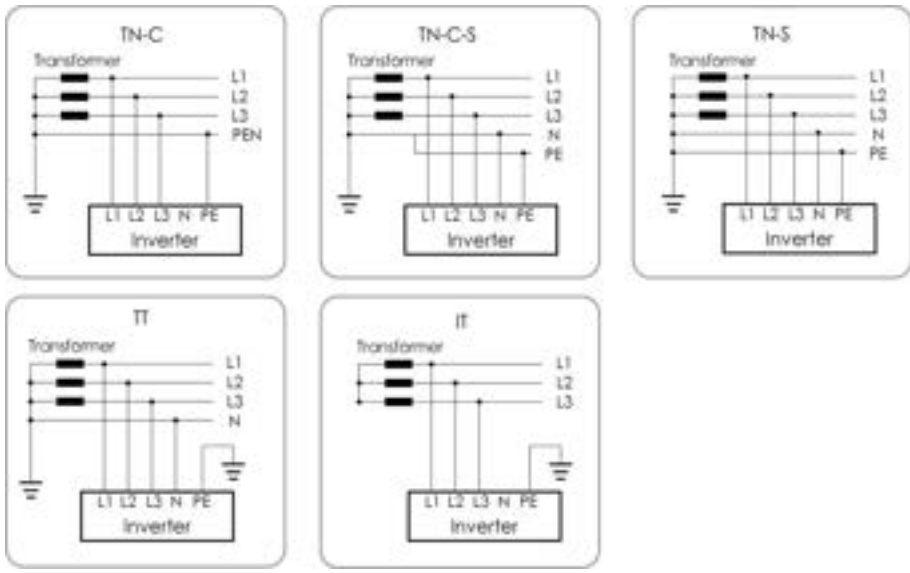

2.2 Product Introduction

Model Description

The model description is as follows :

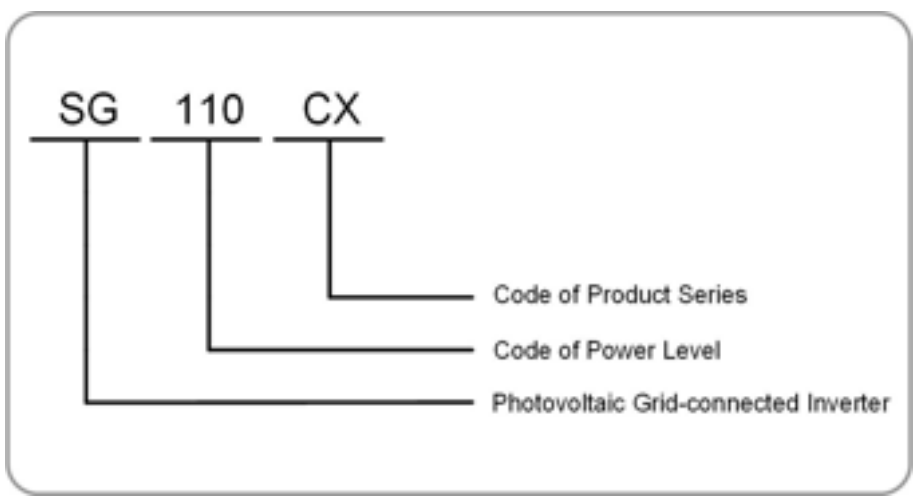

Appearance

The following figure shows the dimensions of the inverter. The image shown here is for reference only. The actual product received may differ.

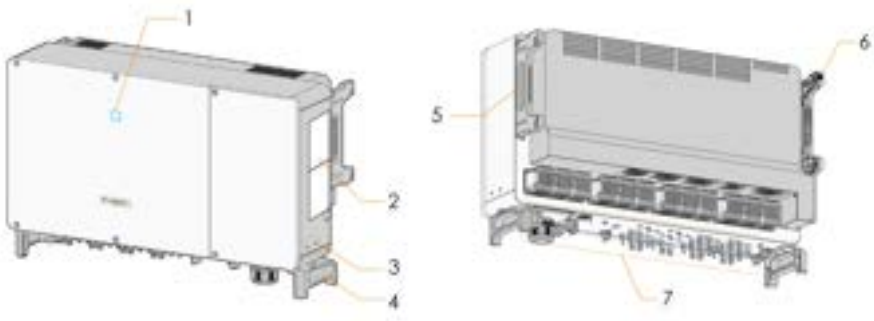

figure 2-2 Inverter Appearance

* The image shown here is for reference only. The actual product received may differ.

No.	Name	Description
1	LED indicator panel	HMI interface to indicate the present working state of the inverter.
2	Labels	Warning symbols, nameplate, and QR code.
3	Additional grounding terminals	2, use at least one of them to ground the inverter.
4	Bottom handles	2, used to move the inverter.
5	Side handles	2, used to move the inverter.
6	Mounting ears	4, used to hang the inverter onto the mounting-bracket.
7	Wiring area	DC switches, DC terminals, and communication terminals. For details, refer to"5.2 Terminal Description"

Dimensions

The following figure shows the dimensions of the inverter.

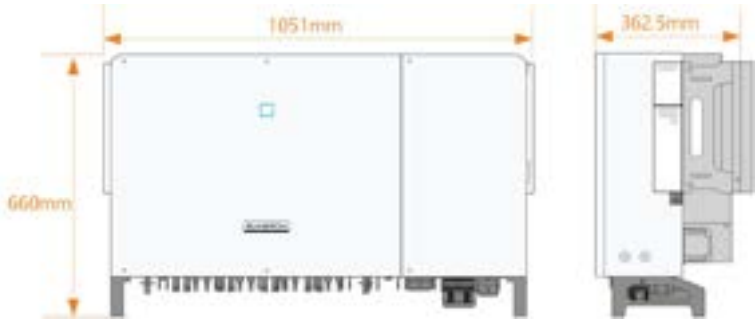

figure 2-3 Dimensions of the Inverter(in mm)

2.3 Symbols on the Product

Symbol	Explanation
	Do not dispose of the inverter together with household waste.
	TÜV mark of conformity.
	CE mark of conformity.
	Regulatory compliance mark.
	CGC-SOLAR mark of conformity.
	Danger to life due to high voltages! Only qualified personnel can open and service the inverter.
	Disconnect the inverter from all the external power sources before maintenance!
	Burn danger due to the hot surface that may exceed 60°C.
	Do not touch live parts for 5 minutes after disconnection from the power sources.
	Read the user manual before maintenance!

* The table shown here is for reference only. The actual product received may differ.

2.4 LED Indicator

The LED indicator on the front of the inverter indicates the working state of the inverter.

table 2-1 State description of the LED indicator

LED color	State	Definition
 Blue	On	The device is connected to the grid and operating normally.
	Fast blink (Period: 0.2s) 	The Bluetooth communication is connected and there is data communication. No system fault occurs.
	Slow blink (Period: 2s) 	The device is in standby or startup state (not feeding power into the grid).
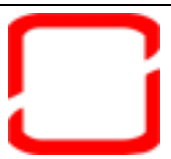 Red	On	A fault occurs and the device cannot connect to the grid.
	Twinkling	The Bluetooth connection is established, data communication in process, and a system fault occurs.
 Gray	OFF	Both the AC and DC sides are powered down.

2.5 DC Switch

The DC switch is used to disconnect the DC current safely whenever necessary.
The SG110CX is equipped with three DC switches, and each DC switch controls its corresponding DC terminals.

Turn the DC switches to the ON position before restarting the inverter.

2.6 Circuit Diagram

The following figure shows the main circuit of the inverter.

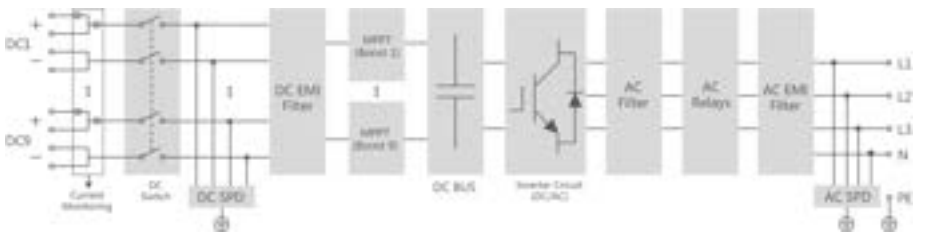

figure 2-4 Circuit Diagram

- The MPPT is utilized for DC input to ensure the maximum power from the PV array at different PV input conditions.
- The inverter circuit converts the DC power into AC power and generates AC power to loads or utility grid through the AC terminal.
- The protection circuit ensures the safe operation of the device and personal safety.

2.7 Function Description

The inverter is equipped with the following functions:

Conversion Function

The inverter converts the DC current into grid-compatible AC current and feeds the AC current into the grid.

Data Storage

The inverter logs running information, error records, etc.

Parameter Configuration

The inverter provides various settable parameters. Users can set parameters via the App to meet the requirements and optimize the performance.

Communication Interface

The inverter is designed with standard RS485 communication interfaces.

The standard RS485 communication interfaces are used to establish communication connection with monitoring devices and upload monitoring data by using communication cables. After communication connection is established, users can view inverter information or set inverter parameters through the iSolarCloud.

Protection Function

The protective functions are integrated in the inverter, including anti-island protection, LVRT/HVRT, DC reversed polarity protection, AC short circuit protection, leakage current protection, DC overvoltage/overcurrent protection, etc.

PID Recovery

The PID effect (Potential Induced Degradation) of PV modules will cause serious damage to generated output and yield, which can be avoided or recovered by PID recovery function.

- For positive voltage scheme, after the PID is enabled, the voltage to ground of all PV strings is greater than 0, and therefore the PV string-to-ground voltage is a positive value.

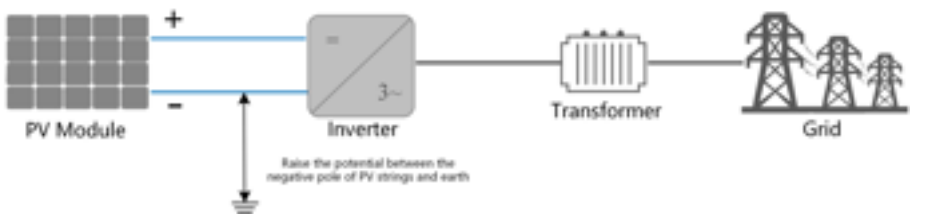

- For negative voltage scheme, after the PID is enabled, the voltage to ground of all PV strings is lower than 0, and therefore the PV string-to-ground voltage is a negative value.

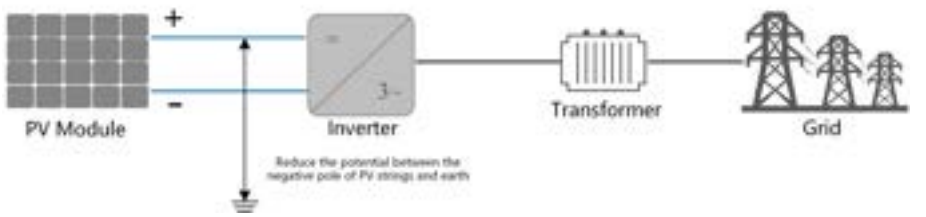

NOTICE

- **Before enabling the PID recovery function, make sure the voltage polarity of the PV modules to ground meets requirement. If there are any questions, contact the PV module manufacturer or read the corresponding user manual.**
- **If the voltage scheme for the PID protection / recovery function does not meet the requirement of corresponding PV modules, the PID will not work as expected or even damage the PV modules.**
- **PID recovery function and Q at night cannot be enabled at the same time.**
- **If the PID recovery function is enabled, it only works at night.**
- **PID recovery function and Q at night cannot be enabled at the same time.**
- **After the PID recovery function is enabled, the voltage of the PV string to ground is 500Vdc by default, and the default value can be modified through the App.**

AFCI Function(Optional)

- AFCI activation

This function can be enabled to detect whether arc occurs in the DC circuit of the inverter.

- AFCI self-test

This function is intended to detect whether the AFCI function of the inverter is normal.

3 Unpacking and Storage

3.1 Unpacking and Inspection

The device is thoroughly tested and strictly inspected before delivery. Nonetheless, damage may still occur during shipping. For this reason, please conduct a thorough inspection after receiving the device.

- Check the packing case for any visible damage.
- Check the scope of delivery for completeness according to the packing list.
- Check the inner contents for damage after unpacking.

Contact SUNGROW or the transport company in case of any damage or incompleteness, and provide photos to facilitate services.
Do not dispose of the original packing case. It is recommended to store the device in the original packing case when the device is decommissioned.

3.2 Inverter Storage

Proper storage is required if the inverter is not installed immediately.

- Store the inverter in the original packing case with the desiccant inside.
- The storage temperature must be always between -40℃ and +70℃, and the storage relative humidity must be always between 0 and 95 %, non-condensing.
- In case of stacking storage, the number of stacking layers should never exceed the limit marked on the outer side of the packing case.
- The packing case should be upright.
- If the inverter has been stored more than half a year, the qualified personnel should thoroughly check and test it before installation.

4 Mechanical Mounting

⚠ WARNING

Respect all local standards and requirements during mechanical installation.

4.1 Safety during Mounting

⚠ DANGER

Make sure there is no electrical connection before installation.

In order to avoid electric shock or other injury, make sure that holes will not be drilled over any electricity or plumbing installations.

⚠ CAUTION

Risk of injury due to improper handling

- **Always follow the instructions when moving and positioning the inverter.**
- **Improper operation may cause injuries or serious wounds.**

In the case of poor ventilation, the system performance may compromise.

- **Keep the heat sinks uncovered to ensure heat dissipation performance.**

4.2 Location Requirements

Select an optimal mounting location for safe operation, long service life and expected performance.

- The inverter with protection rating IP66 can be installed both indoors and outdoors.
- Install the inverter at a place convenient for electrical connection, operation, and maintenance.

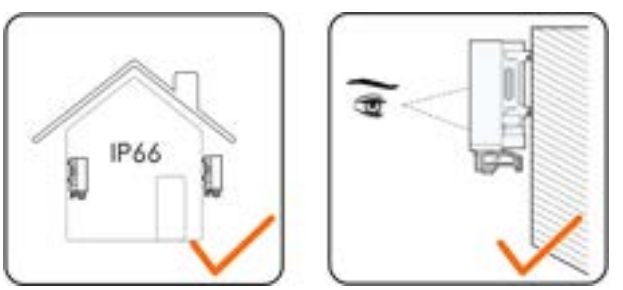

4.2.1 Environment Requirements

- The installation environment must be free of inflammable or explosive materials.
- The location should be not accessible to children.
- The ambient temperature and relative humidity must meet the following requirements.

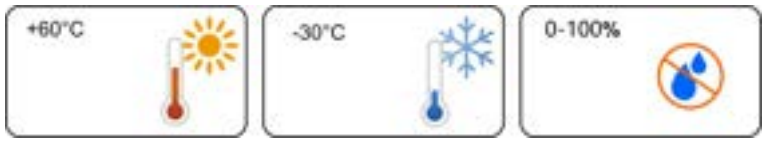

- Do not install the inverter outdoors in areas with high salinity, which mainly refer to the areas within 500 m away from the coast. The deposition of salt fog varies largely with nearby seawater characteristics, sea wind, precipitation, relative humidity, terrain, and forest coverage.
- Avoid direct exposure to sun, rain and snow.
- The inverter should be well ventilated. Ensure air circulation.
- Never install the inverter in living areas. The inverter will generate noise during operation, affecting daily life.

4.2.2 Carrier Requirements

The concrete wall should be capable of withstanding a force of four times the weight of the inverter and be suitable for the dimensions of the inverter.
The installation carrier should meet the following requirements:



4.2.3 Angle Requirements

Install the inverter vertically or at the maximum allowable rear tilt angle. Do not install the inverter horizontally, forward, excessively backward, sideways, or upside down.

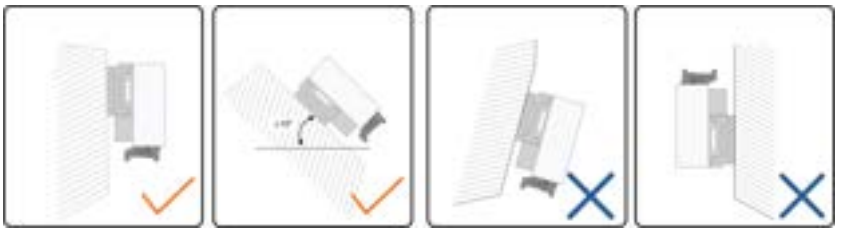

In case the installation site is a level surface, mount the inverter to the horizontal-mounting bracket to meet the mounting angle requirements, as shown in the figure below.

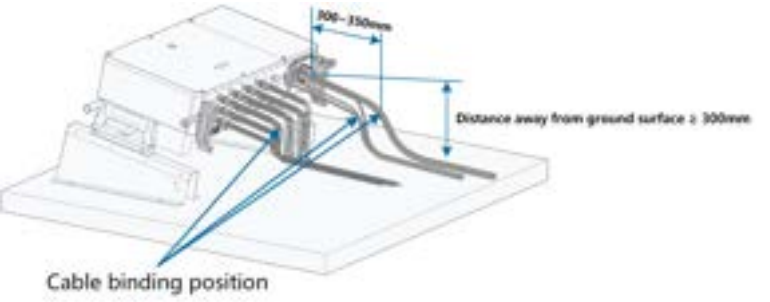

Take the following items into account when designing the bracket scheme:

- Consider onsite climate conditions and take anti-snow and anti-rain measures if necessary.
- Ensure that the waterproof connectors are at least 300mm higher than the ground surface.
- Bind the cables at the positions 300~350mm away from the DC connector, AC waterproof terminal, and communication waterproof terminal.
- The various waterproof terminals should be tightened in accordance with the torque requirements in this manual to ensure that they are tight and sealed.

Contact SUNGORW if you have any question.

4.2.4 Clearance Requirements

Reserve enough clearance around the inverter to ensure sufficient space for heat dissipation.

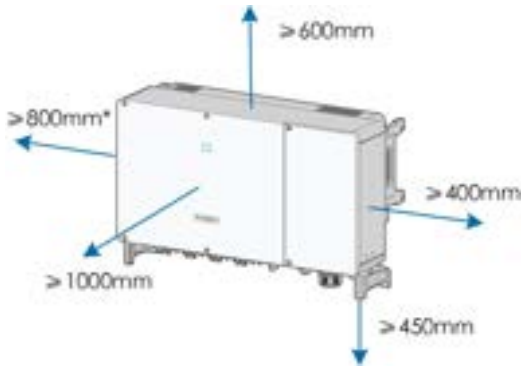

* In case the distance is less than 800 mm, move the inverter from the mounting-bracket or wall before maintaining fans.

In case of multiple inverters, reserve specific clearance between the inverters. For other installation scenarios, please refer to the relevant technical documents on http://support.sungrowpower.com/.



In case of back-to-back installation, reserve specific clearance between the two inverters.

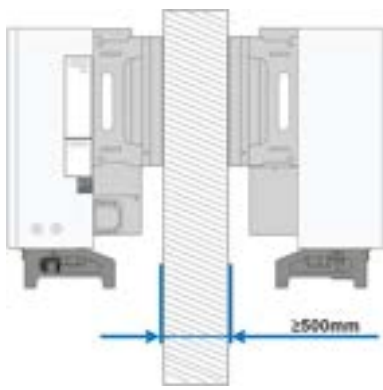

Install the inverter at an appropriate height for ease of viewing LED indicator and operating switch(es).

4.3 Installation Tools

Installation tools include but are not limited to the following recommended ones. If necessary, use other auxiliary tools on site.

table 4-1 Tool specification

			
Goggles	Earplugs	Dust mask	Protective gloves
			
Insulated shoes	Utility knife	Slotted screwdriver (M2, M6)	Phillips screwdriver (M4, M6, M8)
			
Hammer drill (φ12, φ14)	Pliers	Marker	Level
			
Rubber mallet	Socket wrench set (16mm)	Wrench (13 mm, 16 mm)	Wrist strap
			
Wire cutter	Wire stripper	Hydraulic plier	Heat gun
			

MC4 terminal crimping pliers 4–6mm²	MC4 terminal wrench	Multimeter ≥ 1100 Vdc	RJ45 crimping tool



Vacuum cleaner

4.4 Moving the Inverter

Before installation, remove the inverter from the packing case and move it to the installation site. Follow the instructions below as you move the inverter:

- Always be aware of the weight of the inverter.
- Lift the inverter using the handles positioned on both sides of the inverter.
- Move the inverter by one or two people or by using a proper transport tool.
- Do not release the equipment unless it has been firmly secured.

4.4.1 Manual Transport

step 1 Release the sealing screws on the mounting ears with a flat-head screwdriver and store them properly. Anchor the four supplied screw-in handles to the mounting ears and base of the inverter.

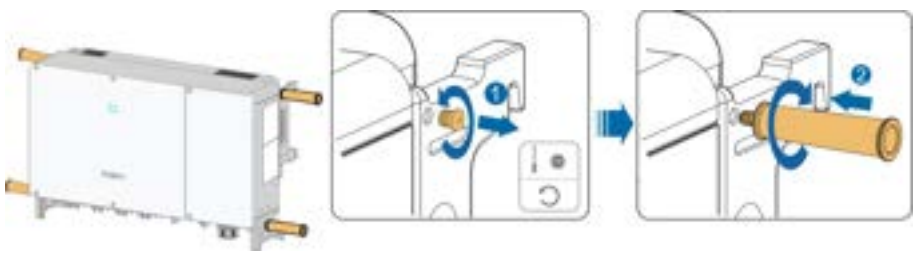

step 2 Lift and move the inverter to the destination by using the side and bottom handles as well as the four installed handles.

step 3 Remove the screw-in handles and reassemble the sealing screws released in Step 1.

⚠ CAUTION

Inappropriate moving operation may cause personal injury!

It is recommended that at least four installers carry the inverter together and wear protective equipment such as smash-proof shoes and gloves.

Always beware of the gravity center of the inverter and avoid tipping.

NOTICE

The ground surface on which the inverter is to be placed should be covered with a sponge pad, foam cushion or the like to prevent the inverter bottom from scratches.

- - End

4.4.2 Hoisting Transport

step 1 Release the sealing screws on the mounting ears and store them properly. Anchor two M12 thread lifting rings to the hangers of the inverter.

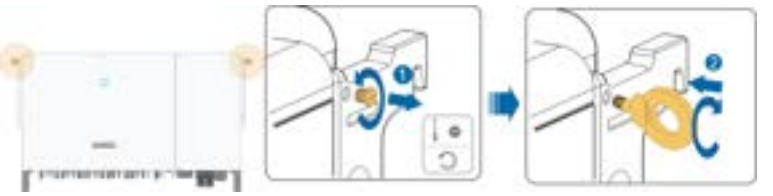

step 2 Lead the sling through the two lifting rings and fasten the tie-down strap.

step 3 Hoist the inverter, and stop to check for safety when the inverter is 100mm above the ground. Continue hoisting the device to the destination after ensuring the safety.

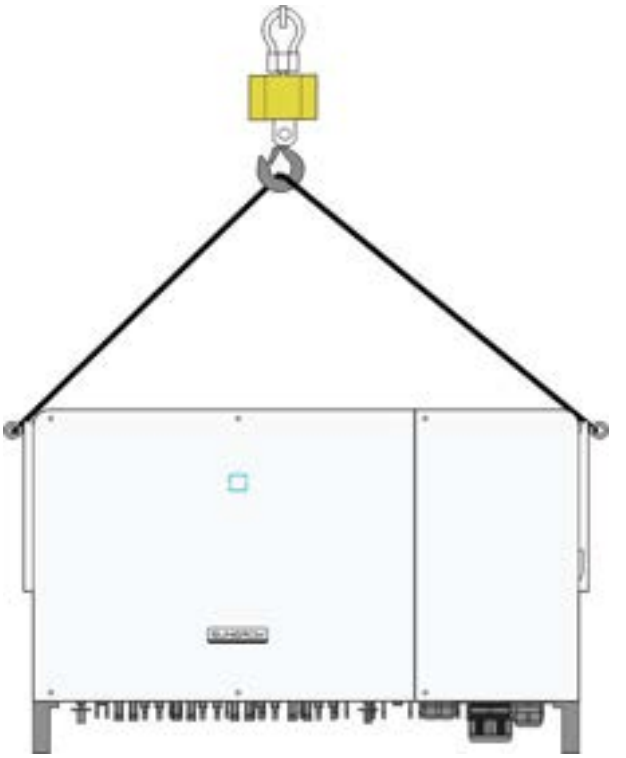

step 4 Remove the lifting rings and reassemble the sealing screws released in Step 1.

CAUTION

Keep the inverter balanced throughout the hoisting process and avoid collisions with walls or other objects.
Stop hoisting in the event of severe weather, such as heavy rain, thick fog, or strong wind.

The lifting rings and the sling are not within the delivery scope.

- - End

4.5 Installing the mounting-bracket

Inverter is installed on the wall and bracket by means of mounting bracket.
The expansion plug set shown below is recommended for the installation.



figure 4-1 Dimensions of mounting-bracket

4.5.1 PV Bracket-Mounted Installation

step 1 Assemble the mounting-bracket by using the connecting bar.

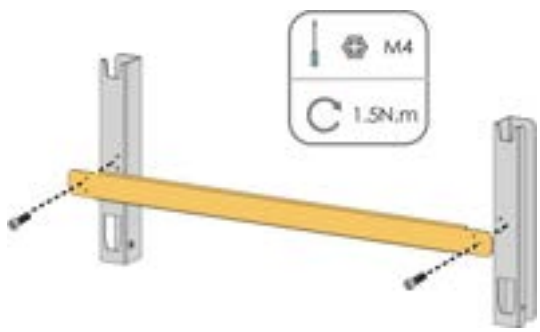

step 2 Level the assembled mounting-bracket by using the level, and mark the positions for drilling holes on the PV bracket. Drill the holes by using a hammer drill.



step 3 Secure the mounting-bracket with bolts.

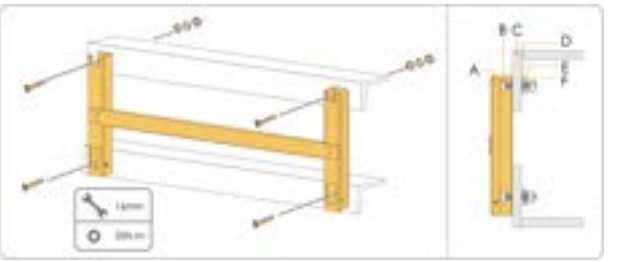

No.	Components	Description
A	Mounting-bracket	–
B	Full threaded bolt	M10*45
C	Metal bracket	–
D	Flat washer	–
E	Spring washer	–
F	Hex nuts	M10

- - End

4.5.2 Wall-Mounted Installation

step 1 Assemble the mounting-bracket by using the connecting bar.

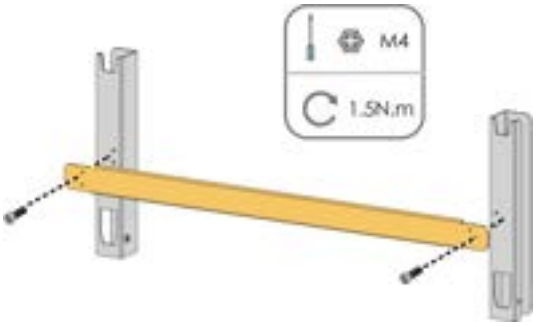

step 2 Level the assembled mounting-bracket by using the level, and mark the positions for drilling holes on the installation site.

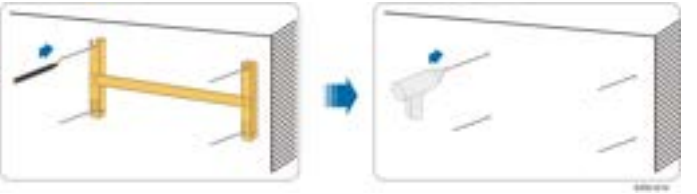

step 3 Insert the expansion bolts into the holes and secure them with a rubber hammer. Fasten the nut with a wrench to expand the bolt. Remove the nut, spring washer, and flat washer, and store them properly.



step 4 Fix the mounting-bracket with the expansion bolts.

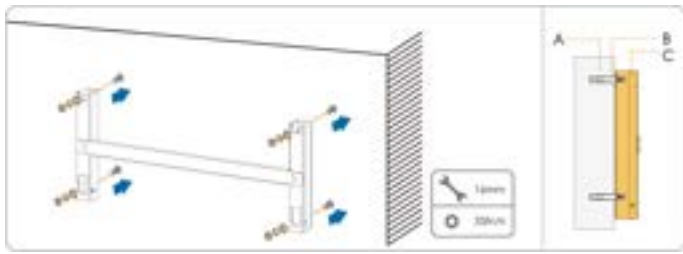

No.	Components	Description
A	Wall	–
B	Expansion bolt	Fastening the bolt in the sequence of nut, spring washer, slat washer
C	Mounting-bracket	–

- - End

4.6 Installing the Inverter

step 1 Take out the inverter from the packing case.

step 2 Hoist the inverter to the installation position when necessary (refer to ""4.4.2 Hoisting Transport""). If the installation position is not high enough, skip this step.

step 3 Hang the inverter to the mounting-bracket and ensure that the mounting ears perfectly engage with the mounting-bracket.

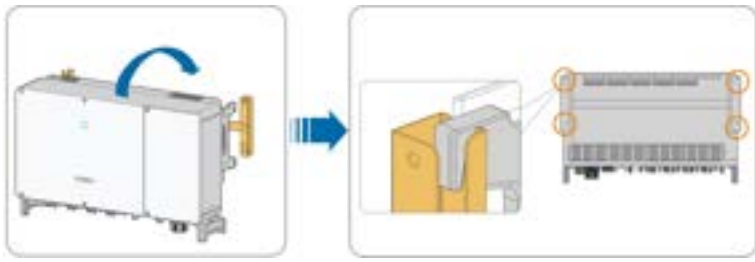

step 4 Fix the inverter with screws.

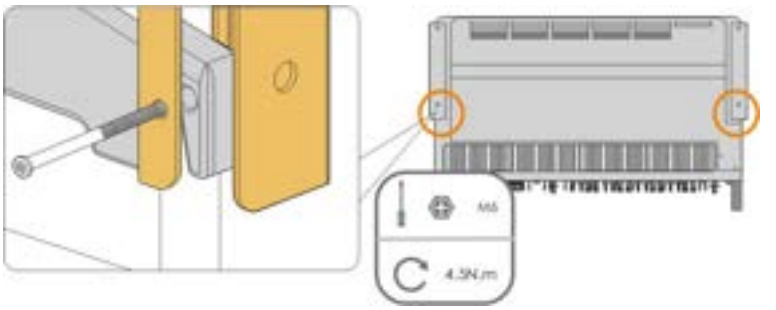

- - End

5 Electrical Connection

5.1 Safety Instructions

Prior to any electrical connections, keep in mind that the inverter has dual power supplies. It is mandatory for the qualified personnel to wear personal protective equipments (PPE) during the electrical work.

⚠ DANGER

Danger to life due to a high voltage inside the inverter!

- **The PV string will generate lethal high voltage when exposed to sunlight.**
- **Before starting electrical connections, disconnect the DC switch and AC circuit breakers and prevent them from inadvertent reconnection.**
- **Ensure that all cables are voltage free before performing cable connection.**

⚠ WARNING

- **Any improper operations during cable connection can cause device damage or personal injury.**
- **Only qualified personnel can perform cable connection.**
- **All cables must be undamaged, firmly attached, properly insulated and adequately dimensioned.**

NOTICE

Comply with the safety instructions related to the PV strings and the regulations related to the utility grid.

- **All electrical connections must be in accordance with local and national standards.**
- **Only with the permission of the local utility grid company, the inverter can be connected to the utility grid.**

5.2 Terminal Description

All electrical terminals are located at the bottom of the inverter.

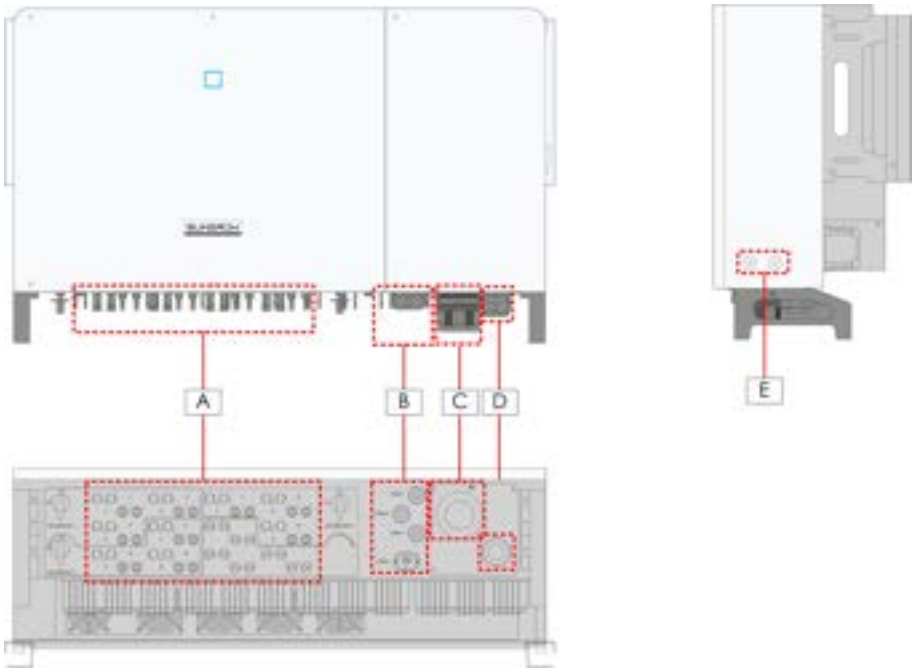

figure 5-1 Terminal Description(For a multi-core cable)

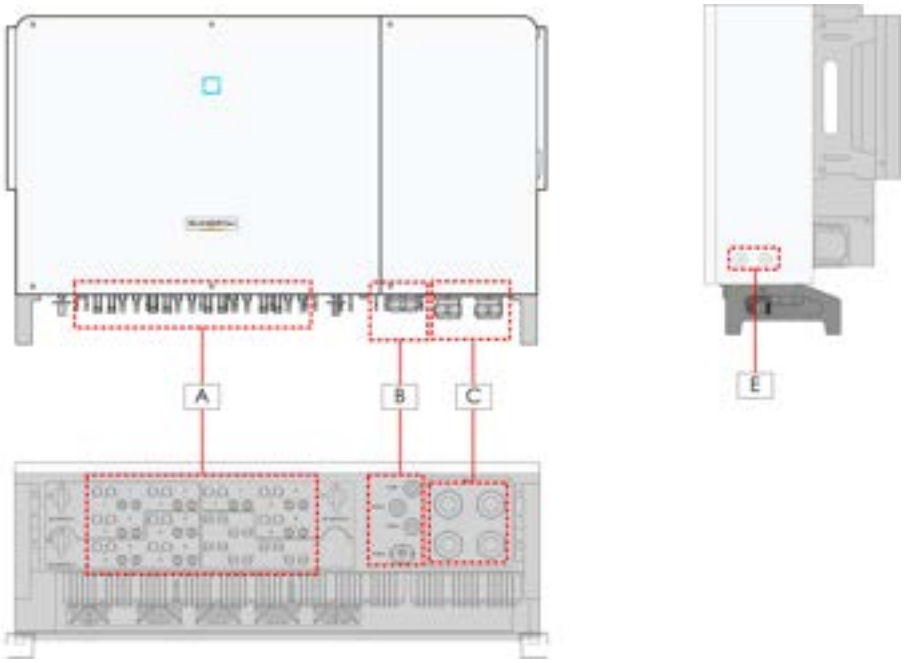

figure 5-2 Terminal Description(For four single-core cables)

* The image shown here is for reference only. The actual product received may differ.

Item	Terminal	Mark	Note
A	PV terminals	+ / -	MC4 PV connector
B	Communication terminal	COM1 / 2 / 3	RS485 communication, digital input/output DI/DO.
		COM4	For communication module connection.
C	AC wiring terminal	AC	Used for AC output cable connection.
D	Standby grounding terminal*		Used for internal grounding.
E	Additional grounding terminal	⏚	use at least one of them to ground the inverter.

*If the PE cable is an independent single-core cable, it should be inserted into the cabinet through the standby grounding terminal.

5.3 Electrical Connection Overview

The electrical connection should be realized as follows:

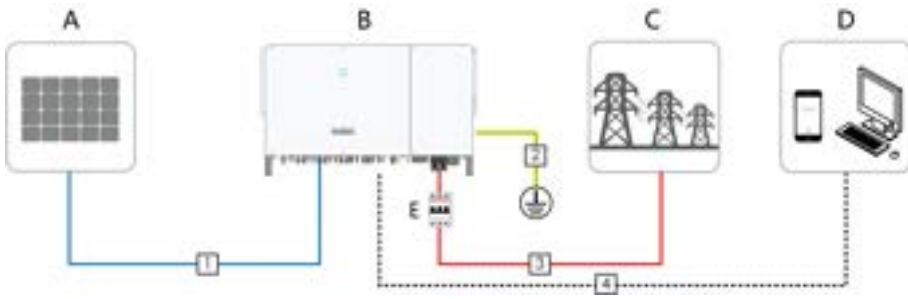

Item	Designation
A	PV string
B	Inverter
C	Grid
D	Monitoring device
E	AC circuit breaker

table 5-1 Cable Requirements

No.	Cable	Type	Specification	
			Cable Diameter(mm)	Cross-sectional Area (mm^2)
1	DC cable	PV cable complying with 1,500V standard	6 ~ 9	4~6
2	Additional grounding cable	Outdoor single-core copper wire cable	The same as that of the PE wire in the AC cable	
3	AC cable	Four/Five-core outdoor copper or aluminum cable(1)(2)	38 ~ 56	L1,L2,L3,(N) wire: 70 ~ 240
				PE wire: refer to "table 5-2 PE Wire Requirements"
		Four single-core outdoor copper or aluminum cables(1)(2)	14 ~ 32	L1,L2,L3,(N) wire: 70 ~ 240
				PE wire: refer to "table 5-2 PE Wire Requirements"
4	Communication cable	Shielded twisted pair (terminal block)	4.5 ~ 18	0.1 ~ 1.5
		CAT-5 Ethernet cable (RJ45)		/

(1) A copper to aluminum adapter terminal is required when an aluminum cable is used. For details, refer to " Aluminium Cable Requirements".

(2) In the case of four single-core cables, a spare AC sealing plate accessory is required as shown in the following figure. To purchase the AC sealing plate accessory, contact SUNGROW.

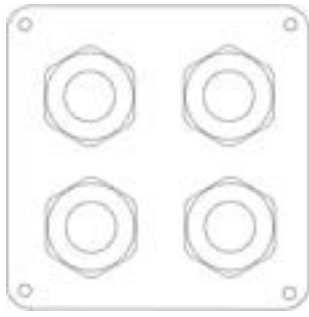

figure 5-3 Spare AC Sealing Plate

Inverter for Australia and New Zealand are equipped with the four-core sealing plate by default.

table 5-2 PE Wire Requirements

PE Wire Cross Section S	PE Wire Cross Section	Note
S > 35 mm²	S / 2	The specifications are valid only when the phase wire and PE wire use the same material. If otherwise, ensure that the cross section of the PE wire produces a conductance equivalent to that of the wire specified in the table.

5.4 Crimp OT/DT terminal

Crimp OT/DT terminal

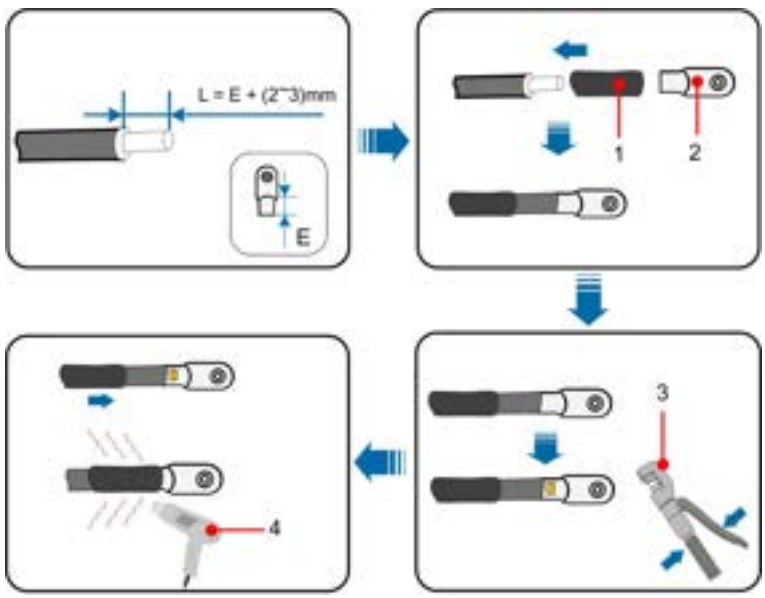

1. Heat shrink tubing
2. OT/DT terminal
3. Hydraulic pliers
4. Heat gun

Aluminium Cable Requirements

If an aluminium cable is selected, use a copper to aluminium adapter terminal to avoid direct contact between the copper bar and the aluminium cable.

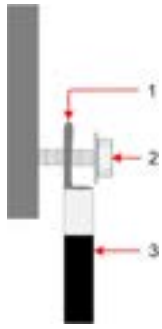

figure 5-4 Aluminium cable terminal connection sequence

1. Copper to Aluminium adapter terminal 2. Flange nut 3. Aluminium cable

Ensure that the selected terminal can directly contact with the copper bar. If there are any problems, contact the terminal manufacturer.

Direct contact between the copper bar and the aluminium cable will cause electro-chemical corrosion and impair the reliability of electrical connection.

5.5 External Grounding Connection

WARNING

- **Since the inverter is transformerless, neither the negative pole nor the positive pole of the PV string can be grounded. Otherwise, the inverter will not operate normally.**
- **Connect the external grounding terminal to the protective grounding point before AC cable connection, PV cable connection, and communication cable connection.**
- **The ground connection of this external grounding terminal cannot replace the connection of the PE terminal of the AC cable. Make sure those terminals are both grounded reliably. Otherwise, SUNGROW shall not be held liable for any damage caused by the violation.**

5.5.1 External Grounding Requirements

All non-current carrying metal parts and device enclosures in the PV power system should be grounded, for example, brackets of PV modules and inverter enclosure.

When there is only one inverter in the PV system, connect the external grounding cable to a nearby grounding point.

When there are multiple inverters in the PV system, connect grounding points of all inverters and the PV array frames to the equipotential cable (according to the onsite conditions) to implement an equipotential connection.

5.5.2 Connection Procedure

step 1 Prepare the cable and OT/DT terminal, refer to " Crimp OT/DT terminal".

step 2 Remove the screw on the grounding terminal and fasten the cable with a screwdriver.

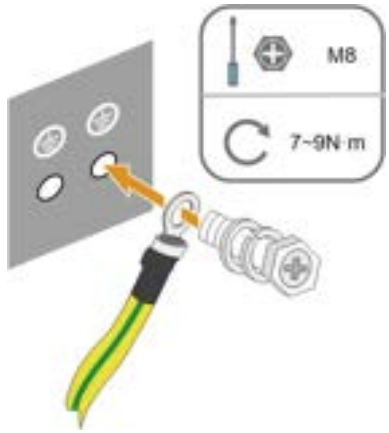

step 3 Apply paint to the grounding terminal to ensure corrosion resistance.

The grounding screws have been anchored to the side of the inverter before delivery, and do not need to be prepared.

There are two grounding terminals. Use one of them to ground the inverter.

- - End

5.6 Opening the Wiring Compartment

step 1 Release two screws on the front cover of the wiring compartment with supplied Allen wrench.

step 2 Open the wiring compartment.

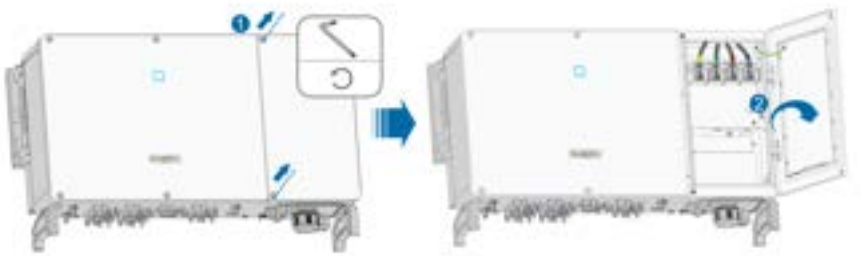

step 3 Keep the wiring compartment open during wiring through the limit lever attached to the cover.

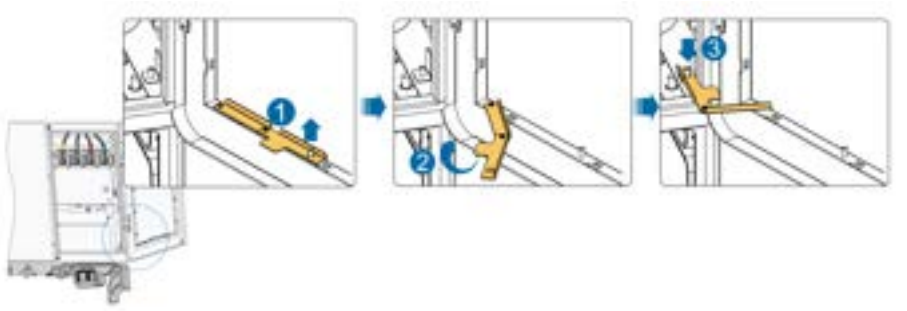

- - End

Close the wiring compartment in reverse order after completing wiring operations.

5.7 AC Cable Connection

5.7.1 AC Side Requirements

Connect the inverter to the grid only after getting an approval from the local electric power company.

Before connecting the inverter to the grid, ensure the grid voltage and frequency comply with requirements, for which, refer to **"Technical Date"**. Otherwise, contact the electric power company for help.

AC Circuit Breaker

An independent circuit breaker or fuse is installed on the output side of the inverter to ensure safe disconnection from the grid.

Inverter Model	Recommended rated voltage	Recommended rated current
SG110CX	400V	200A

NOTICE

Never connect a load between the inverter and the circuit breaker.
Multiple inverters cannot share one circuit breaker.

Residual Current Monitoring Device

With an integrated universal current-sensitive residual current monitoring unit included, the inverter will disconnect immediately from the mains power once a fault current with a value exceeding the limit is detected.

However if an external residual current device (RCD) (type A is recommended) is mandatory, the switch must be triggered at the residual current. RCD of other specifications can also be used according to local standard. The recommended residual current is as follows.

Inverter	Recommended residual current
SG110CX	1100 mA

Multiple Inverters in Parallel Connection

If multiple inverters are connected in parallel to the grid, ensure that the total number of parallel inverters does not exceed 25. Otherwise, please contact SUNGROW for technical scheme.

MV Transformer

The MV transformer used together with the inverter should meet the following requirements:

- The transformer may be a distribution transformer, and it must be designed for the typical cyclical loads of a PV system (load in the day and no load at night).
- The transformer may be of the liquid-immersed type or dry type, and shield winding is not necessary.
- The line-to-line voltage on the LV side of the transformer should endure the output voltage of inverter. When the transformer is connected to the IT grid, to-ground withstanding voltage of the LV winding of the transformer, the LV side AC cables, and the LV side secondary equipment (including the relay protection device, detection & measuring device, and other related auxiliary devices) should not be lower than 1,100V.
- The line-to-line voltage on the HV side of the transformer should comply with the local power grid voltage.
- A transformer with a tap changer on the HV side is recommended in order to keep consistent with the grid voltage.
- At an ambient temperature of 45℃, the transformer can run in 1.1 times of load for long time.
- A transformer with a short-circuit impedance 6% (permissible tolerance: ±10%) is recommended.
- The voltage drop of system cable is no more than 3%.
- The DC component that the transformer can withstand is 1% of the fundamental current at rated power.
- For thermal rating, the load curve of the transformer and environment conditions should be taken into account.
- The apparent power of the inverter should never exceed the power of the transformer. The maximum AC current of all inverters connected in parallel must be taken into account. If more than 25 inverters are connected to the grid, contact SUNGROW.
- The transformer must be protected against overloading and short circuit.
- The transformer is an important part of grid-connected PV generation system. The fault tolerance capacity of the transformer should be taken into account at all times. The fault include: system short circuit, grounding fault, voltage drop, etc.

- Take ambient temperature, relative humidity, altitude, air quality, and other environmental conditions into account when selecting and installing the transformer.

5.7.2 Requirements for OT/DT Terminal

OT/DT terminals (not included in the delivery scope) are required for fixing AC cables to the terminal block. Purchase the OT/DT terminals according to the following requirements.

OT/DT Terminals of Phase Wire

- Specification: M12;
- Dimensions: a≤46 mm / 13 mm≤b≤15.5 mm / c≤22 mm



OT/DT Terminal of PE Wire

- Specification: M8 / M10.

5.7.3 Connection Procedure(For a multi-core cable)

In this manual, description is given by using five-core cable as an example. The wiring of the four-core cable is the same.

step 1 Open the wiring compartment. For details, refer to "5.6 Opening the Wiring Compartment".

step 2 Disconnect the AC-side circuit breaker and prevent it from inadvertent reconnection.

step 3 Loosen the swivel nut of the AC waterproof connector and select a seal according to the cable outer diameter, remove the inner sealing ring if the cable diameter is larger than 47 mm. Lead the cable through the swivel nut, seal, and wiring terminal successively.

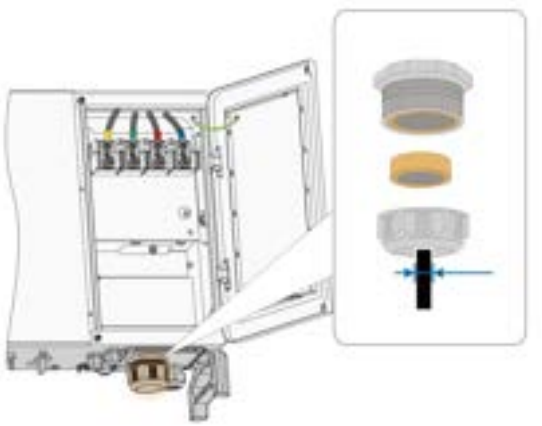

step 4 Remove the protection cover and store the released screws properly.

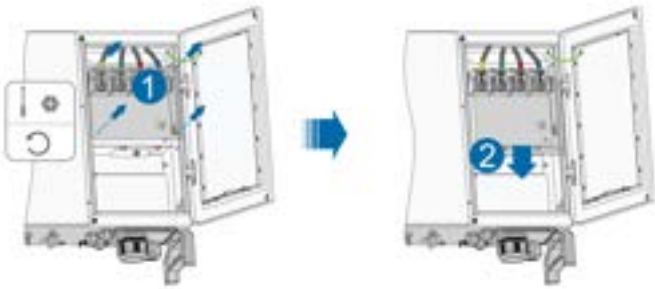

step 5 Strip the protection layer and insulation layer by specific length, as described in the figure below.

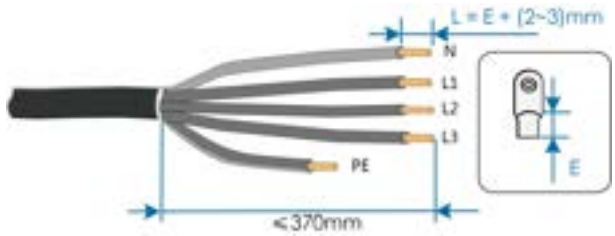

step 6 Make the cable and crimp OT/DT terminal.

step 7 Secure the wires to corresponding terminals.

NOTICE

Note the terminal positions of PE wire and N wire. If a phase wire is connected to the PE terminal or N terminal, unrecoverable damage may be caused to the inverter.

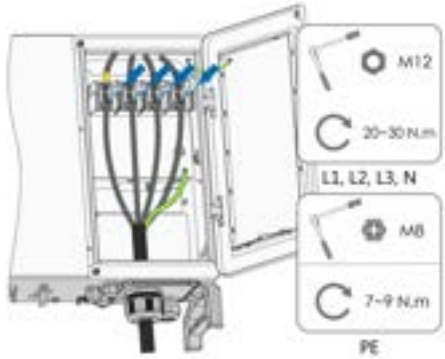

Ensure that the depth L of the socket used is not less than 28mm.

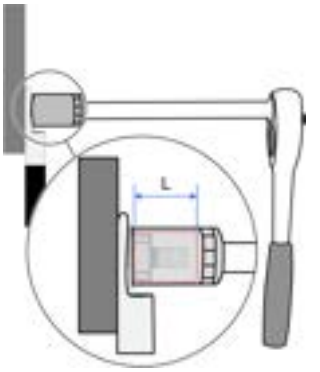

step 8 Gently pull the cable backwards to ensure firm connection, and fasten the swivel nut clockwise.

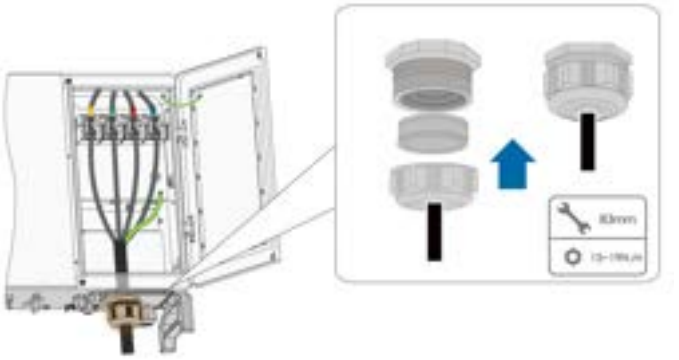

NOTICE

If the PE cable is an independent single-core cable, it should be inserted into the cabinet through the standby grounding terminal.

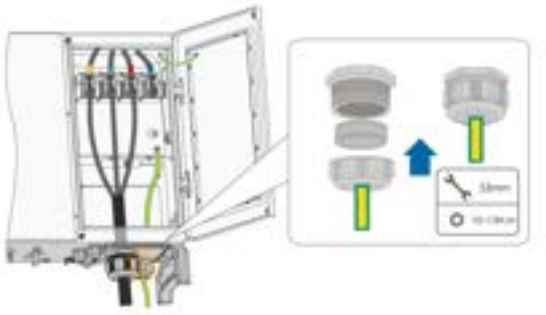

step 9 Install the protection cover

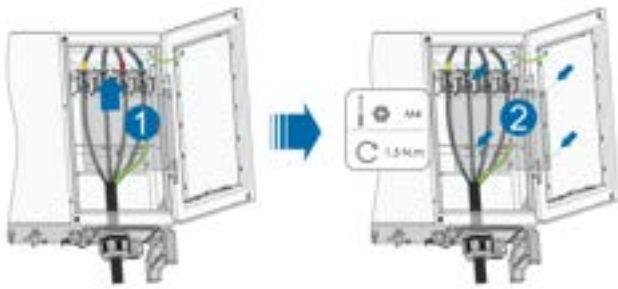

- - End

5.7.4 Connection Procedure(L1/L2/L3/N, For four single-core cables)

step 1 Open the wiring compartment. For details, refer to"5.6 Opening the Wiring Compartment".

step 2 Disconnect the AC-side circuit breaker and prevent it from inadvertent reconnection.

step 3 Loosen the swivel nut of the AC waterproof connector and select a seal according to the cable outer diameter, remove the inner sealing ring if the cable diameter is larger than 22 mm. Lead the cable through the swivel nut, seal, and wiring terminal successively.

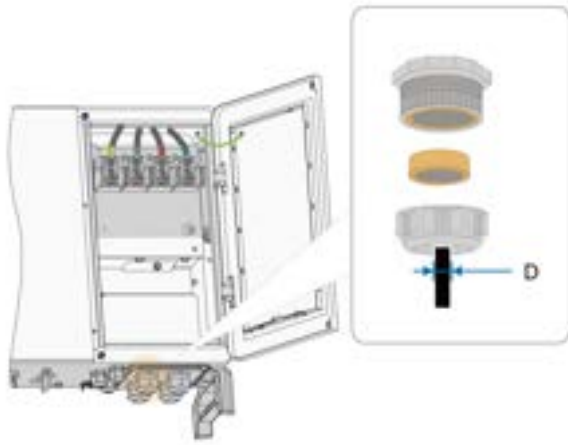

step 4 Remove the protection cover and store the released screws properly.



step 5 Strip the protection layer and insulation layer by specific length, as described in the figure below.

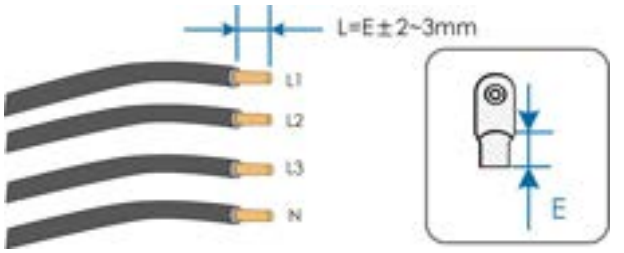

step 6 Make the cable and crimp OT/DT terminal.

step 7 Secure the wires to corresponding terminals.

NOTICE

Note the terminal positions of PE wire and N wire. If a phase wire is connected to the PE terminal or N terminal, unrecoverable damage may be caused to the inverter.

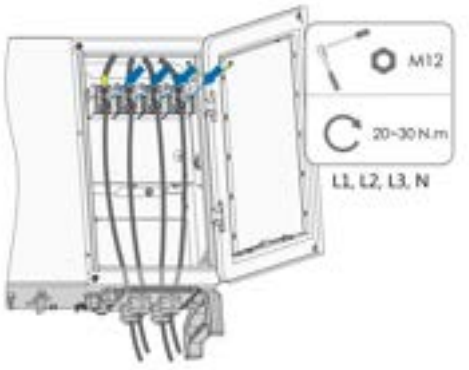

Ensure that the depth L of the socket used is not less than 28mm.

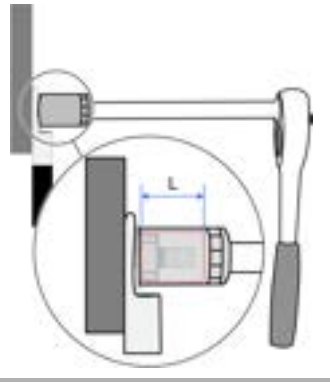

step 8 Gently pull the cable backwards to ensure firm connection, and fasten the swivel nut clockwise.

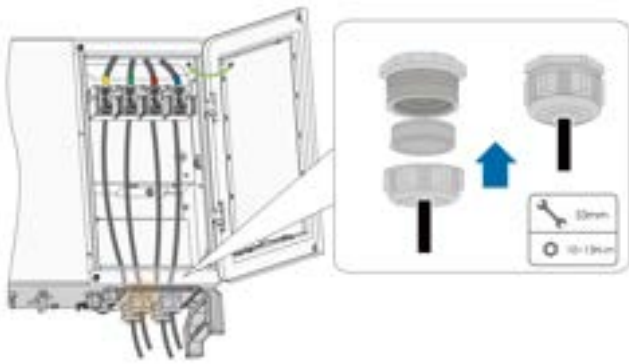

step 9 Install the protection cover

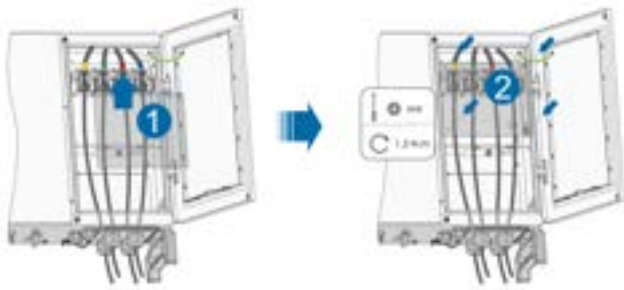

- - End

5.7.5 Connection Procedure(L1/L2/L3/PE, For four single-core cables)

step 1 Open the wiring compartment. For details, refer to"5.6 Opening the Wiring Compartment".

step 2 Disconnect the AC-side circuit breaker and prevent it from inadvertent reconnection.

step 3 Loosen the swivel nut of the AC waterproof connector and select a seal according to the cable outer diameter, remove the inner sealing ring if the cable diameter is larger than 22 mm . Lead the cable through the swivel nut, seal, and wiring terminal successively.

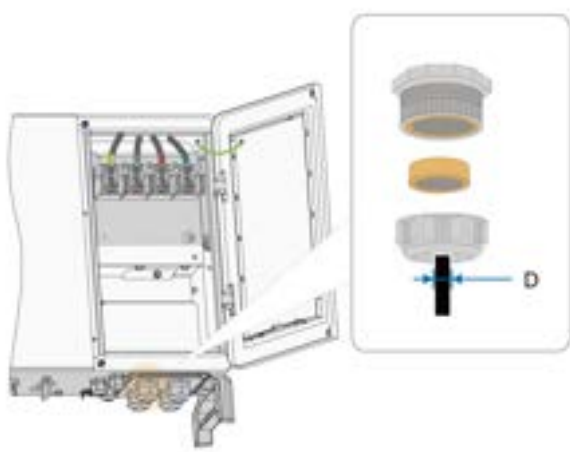

step 4 Remove the protection cover and store the released screws properly.

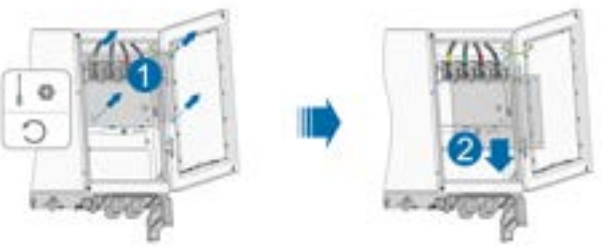

step 5 Strip the protection layer and insulation layer by specific length, as described in the figure below.

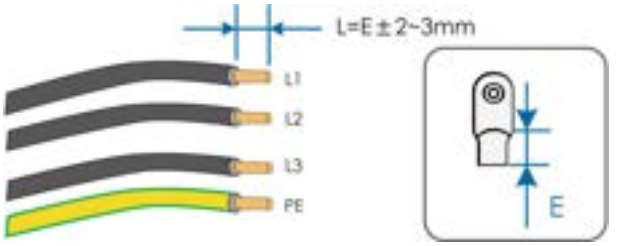

step 6 Make the cable and crimp OT/DT terminal.

step 7 Secure the wires to corresponding terminals.

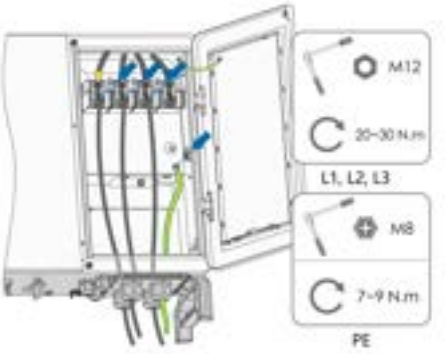

Ensure that the depth L of the socket used is not less than 28mm.

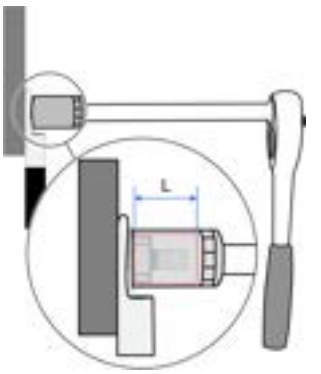

step 8 Gently pull the cable backwards to ensure firm connection, and fasten the swivel nut clockwise.

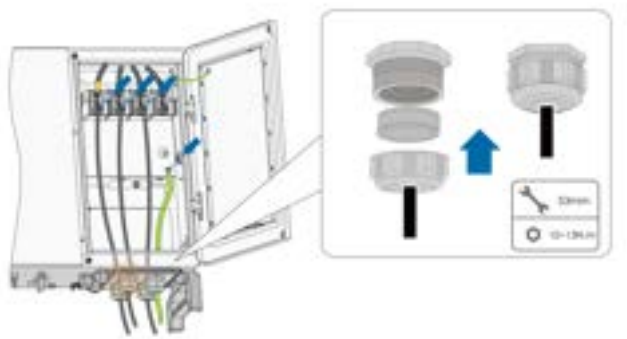

step 9 Install the protection cover

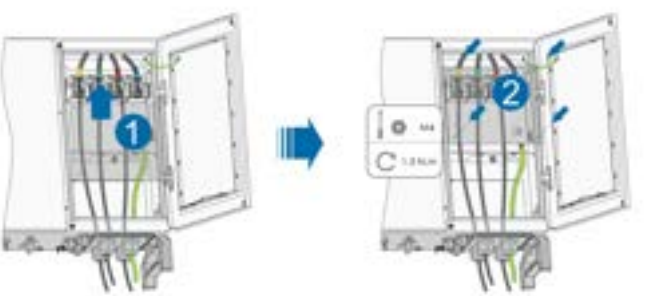

- - End

5.8 DC Cable Connection

DANGER

Danger of electric shock!

The PV array will generate lethal high voltage once exposed to sunlight.

WARNING

Make sure the PV array is well insulated to ground before connecting it to the inverter.

During the installation and operation of the inverter, please ensure that the positive or negative polarities of PV strings do not short-circuit to the ground. Otherwise, an AC or DC short-circuit may occur, resulting in equipment damage. The damage caused by this is not covered by the warranty.

NOTICE

Risk of inverter damage! Observe the following requirements. Failure to do so will void guarantee and warranty claims.

- **Make sure the maximum DC voltage and the maximum short circuit current of any string never exceed inverter permitted values specified in "Technical Data".**
- **Mixed use of different brand or model of PV modules in a PV string or a compromised PV string design composed with PV modules from rooftops of different orientation may not damage inverter but will cause system bad performance!**
- **The inverter enters standby state when the input voltage ranges between 1,000 V and 1,100 V. The inverter returns to running state once the voltage returns to the MPPT operating voltage range, namely, 200 V to 1,000 V.**

5.8.1 PV Input Configuration

As shown in the figure below, the inverter is provided with multiple PV inputs: PV inputs 1~9; and each PV input is designed with an MPP tracker.

Each PV input operates independently and has its own MPPT. In this way, string structures of each PV input may differ from each other, including PV module type, number of PV modules in each string, angle of tilt, and installation orientation.

Each PV input area includes two DC inputs DC1 and DC2. For the best use of DC power, DC1 and DC2 should be the same in PV string structure, including the type, number, tilt, and orientation of the PV modules.

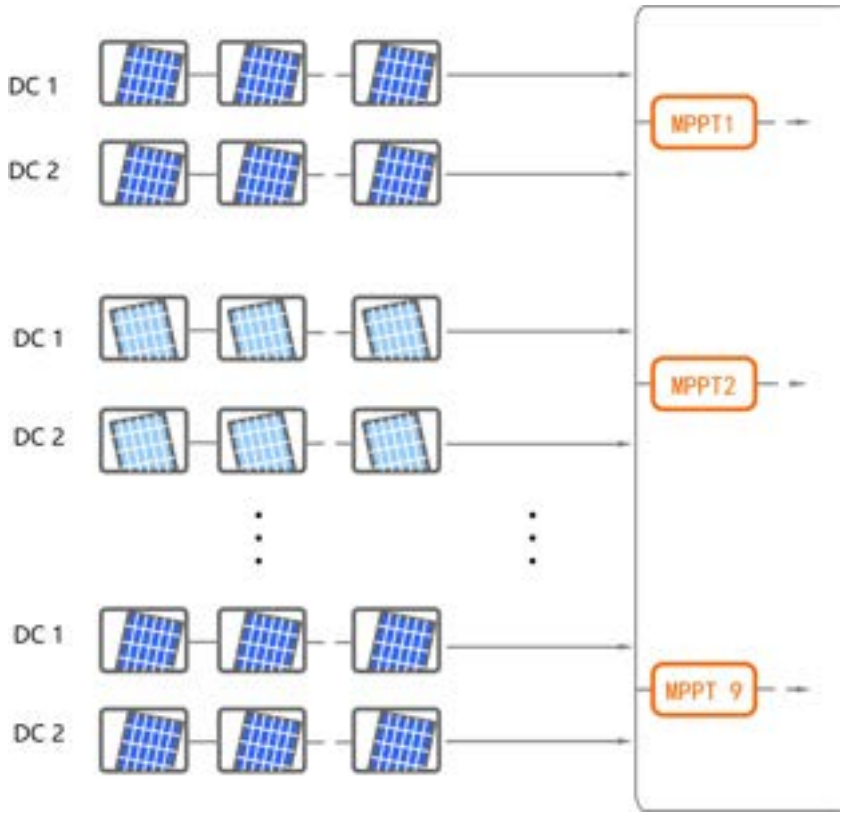

Type	Open Circuit Voltage Limit	Max. Current for Input Connector
SG110CX	1100V	30A

5.8.2 Assembling the PV Connectors

DANGER

High voltage may be present in the inverter!

- **Ensure all cables are voltage-free before performing electrical operations.**
- **Do not connect the AC circuit breaker before finishing electrical connection.**

CAUTION

- **Use MC4 DC terminals if the maximum input voltage is no more than 1,000 V.**
- **Use MC4-Evo2 DC terminals if the maximum input voltage is greater than 1,000 V. To purchase the MC4-Evo2 DC terminals, contact SUNGROW.**
- **Select appropriate DC terminals as required above. Otherwise, SUNGROW shall be held no liability for the damage caused.**

SUNGROW provides corresponding PV connectors in the scope of delivery for quick connection of PV inputs. To ensure IP66 protection, use only the supplied connector or the connector with the same ingress of protection.

step 1 Strip 7 mm–8 mm of the insulation from each PV cable.

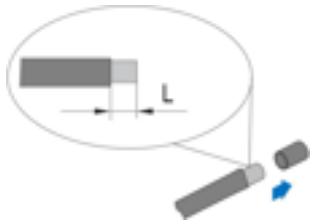

step 2 Assemble the cable ends with the crimping pliers.

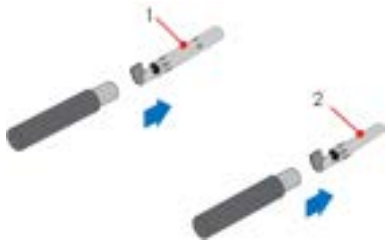

1: Positive crimp contact 2：Negative crimp contact

step 3 Lead the cable through cable gland, and insert the crimp contact into the insulator until it snaps into place. Gently pull the cable backward to ensure firm connection. Tighten the cable gland and the insulator (torque 2.5 N.m to 3 N.m).



step 4 Check for polarity correctness.

NOTICE

If the PV polarity is reversed, the inverter will be in a fault or alarm state and will not operate normally.

- - End

5.8.3 Installing the PV Connector

step 1 Rotate the DC switch to “OFF” position.

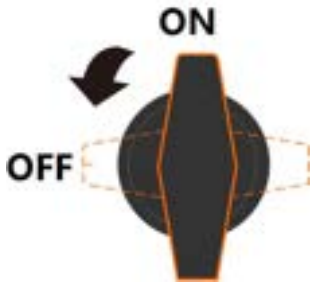

step 2 Check the cable connection of the PV string for polarity correctness and ensure that the open circuit voltage in any case does not exceed the inverter input limit of 1,100V.



step 3 Connect the PV connectors to corresponding terminals until there is an audible click.

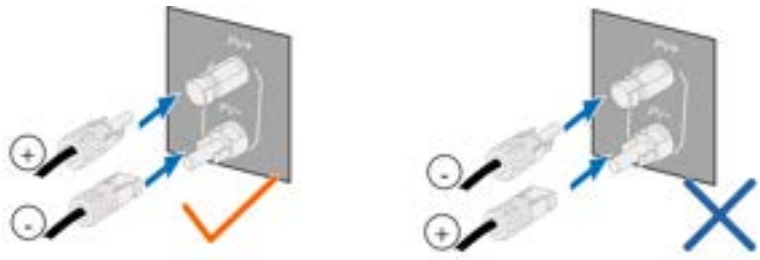

NOTICE

- **Check the positive and negative polarity of the PV strings, and connect the PV connectors to corresponding terminals only after ensuring polarity correctness.**
- **Arc or contactor over-temperature may occur if the PV connectors are not firmly connected in place, and SUNGROW shall not be held liable for any damage caused due to this operation.**

step 4 Follow the foregoing steps to connect PV connectors of other PV strings.

step 5 Seal any unused PV terminal with a terminal cap.

NOTICE

If the DC input is connected inversely and the DC switch has been rotated to "ON", do not operate immediately. Otherwise, the equipment may be damaged. Please turn the DC switch to "OFF" and remove the DC connector to adjust the polarity of the strings when the string current is lower than 0.5A.

- - End

5.9 RS485 Connection

5.9.1 Interface Description

The following figure shows the position of the communication wiring board as well as the terminals equipped for the wiring board.

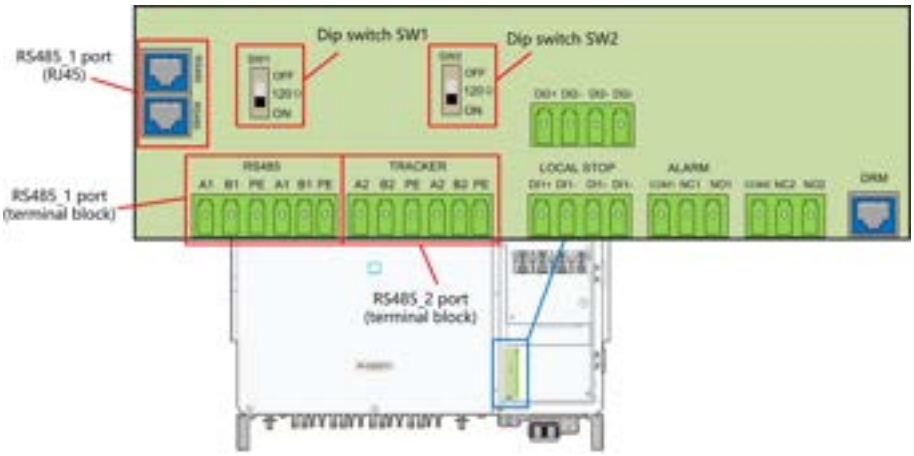

The inverter is equipped with two groups of RS485 communication port for external communication connection, which are RS485_1 port and RS485_2 port.

The port RS485_1 is used to connect Logger, so as to implement data exchange with PC or other monitoring devices. Terminal definitions of the port are as follows:

table 5-3 RS485_1 port terminal definition (Terminal block)

No	Definition
A1	RS485 A IN, RS485A differential signal+
B1	RS485 B IN, RS485B differential signal-
PE	GND, shielded earthing point
A1	RS485 A OUT, RS485A differential signal+
B1	RS485 B OUT, RS485B differential signal-
PE	GND, shielded earthing point

table 5-4 RS485_1 port terminal definition (RJ45)

No	Definition
PIN1~2	N/A
PIN3	RS485 B, RS485B differential signal-
PIN4~5	N/A
PIN6	RS485 A, RS485A differential signal+
PIN7~8	N/A

The terminal block interface and RJ45 interface have the same function with different wiring manner. Select either interface for cable connection.

When multiple inverters are connected in the RS485 daisy chain, a 120Ω terminating resistor can be connected between the A and B communication cables through the RS485-dip switch, to ensure communication quality.

NOTICE

The RS485_1 interface is marked as SW1.

5.9.2 RS485 Communication System

Single-inverter Communication System

In case of a single inverter, communication cable connection requires only one RS485 cable.

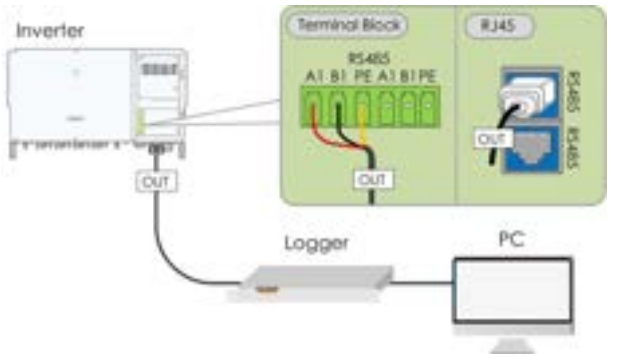

Multi-inverter Communication System

In case of multiple inverters, all the inverters can be connected via RS485 cables in the daisy chain manner.

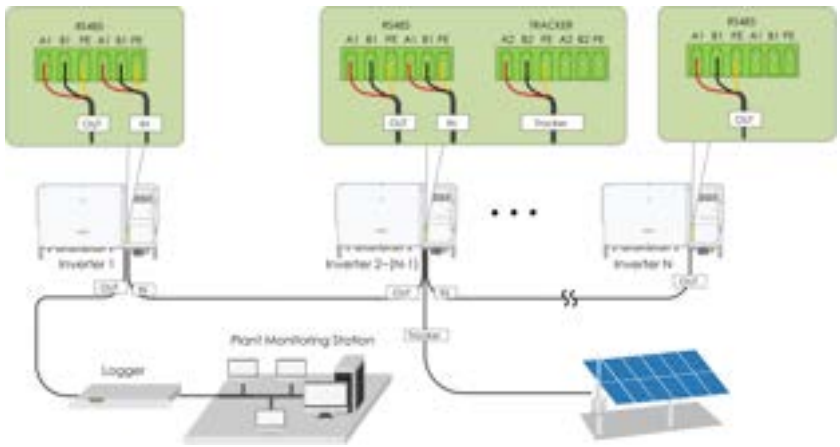

figure 5-5 Multi-inverter Communication System【RS485_1 Interface（Terminal Block）】

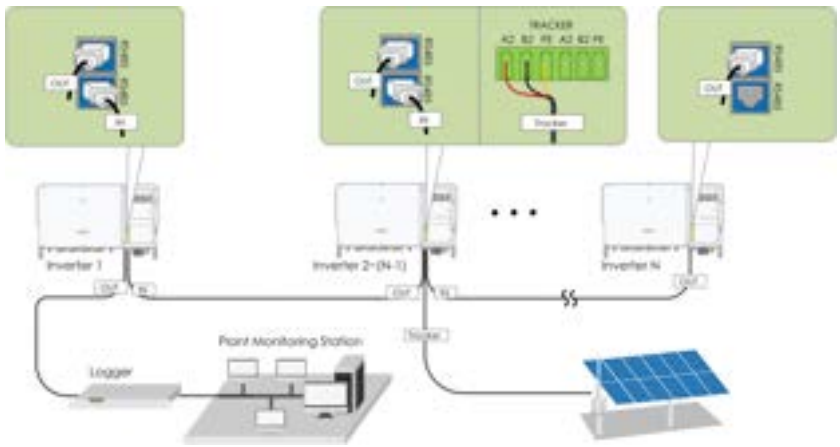

figure 5-6 Multi-inverter Communication System【RS485_1 Interface（RJ45）】

When more than 15 inverters are connected to the same daisy chain, in order to ensure the communication quality, the Logger at the first end of the daisy chain needs to be equipped with a terminal resistor of 120Ω, the inverter at the last end needs to be equipped with a RS485-dip switch (SW1), and the shielding layer of the communication cable should be single-point grounded.

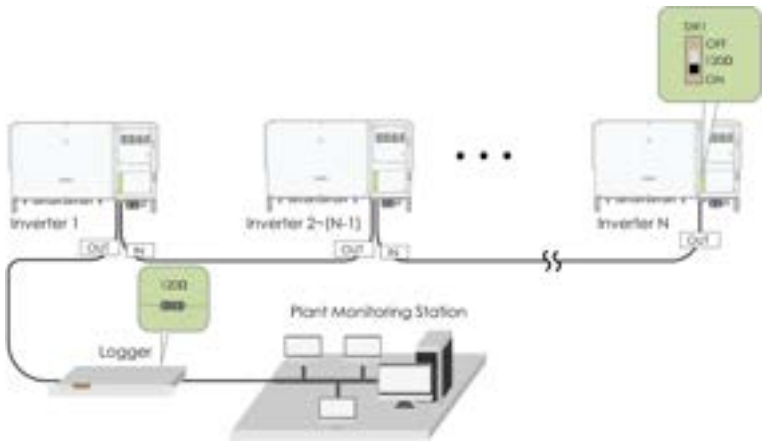

figure 5-7 Configuration of Dip Switch (N≥15)

The length of the RS485 cable and twisted pair cable should be no longer than 1,200m.

If multiple inverters are connected to the data collector Logger3000, the number of permissible daisy chains and the number of devices allowed to be connected should meet the requirements (refer to the user manual for the Logger3000).

5.9.3 Connection Procedure(Terminal Block)

RS485 communication cables should be shielded twisted pair cables or shielded twisted pair Ethernet cables.

There are three communication terminals, and the silkscreen marks are COM1/ COM2/COM3. Please choose according to the actual situation.

step 1 Strip the protection layer and insulation layer by appropriate length.



step 2 Loosen the swivel nut of the junction box and select an appropriate seal according to cable outer diameter. Lead the cable through the swivel nut, seal, and junction box successively.



Outer Diameter D(mm)	Seal
4.5 ~ 6	c
6 ~ 12	a + b
12 ~ 18	b

step 3 Secure the cable to the terminal base.

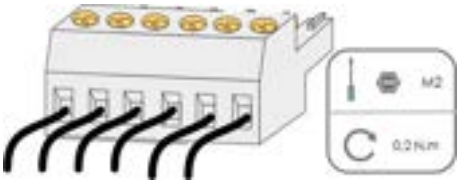

step 4 Insert the terminal base into the corresponding terminal.

step 5 Pull the cable gently to make sure it is secured, tighten the swivel nut clockwise.

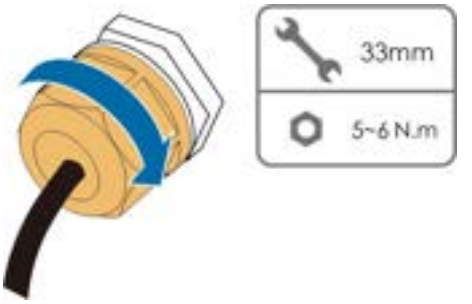

- - End

5.9.4 Connection Procedure (RJ45 Ethernet Port)

step 1 Loosen the swivel nut of the junction box and select an appropriate seal according to cable outer diameter. Lead the cable through the swivel nut, seal, and junction box successively.

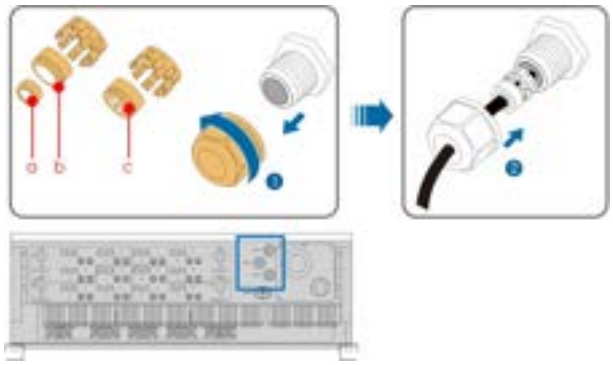

Outer Diameter D(mm)	Seal
4.5 ~ 6	c
6 ~ 12	a + b
12 ~ 18	b

step 2 Strip the insulation layer of the Ethernet cable with a wire stripper, and insert the signal wires to the RJ45 connector(Pin 3 and Pin 6 are for communication connection). Crimp the RJ45 connector with a crimping tool.

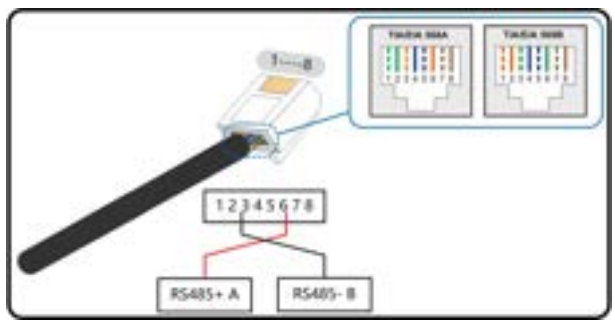

step 3 Insert the RJ45 connector to the RJ45 jack.

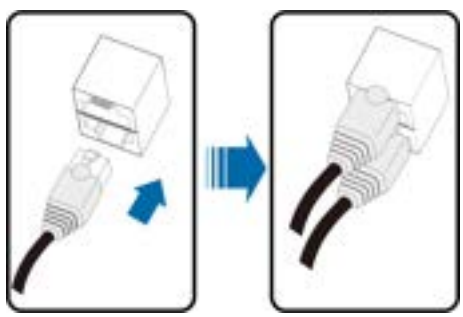

step 4 Pull the cable gently to make sure it is secured, tighten the swivel nut clockwise.

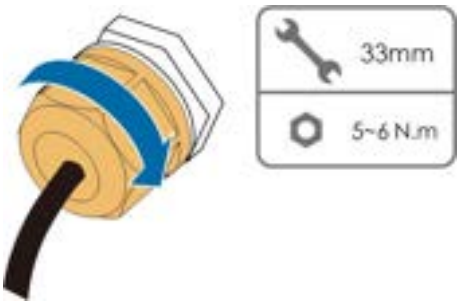

- - End

5.10 Dry Contact Connection

NOTICE

Dry contact cables require a cross section of 1 mm² to 1.5 mm².
The connection procedure of the dry contact is the same as that of the RS485 terminal block.

5.10.1 Dry Contact Function

The configuration circuit board is provided with fault output dry contact and emergency stop dry contact, as shown in the figure below.
Connection method of the dry contacts is similar to that of the RS485 terminal block.

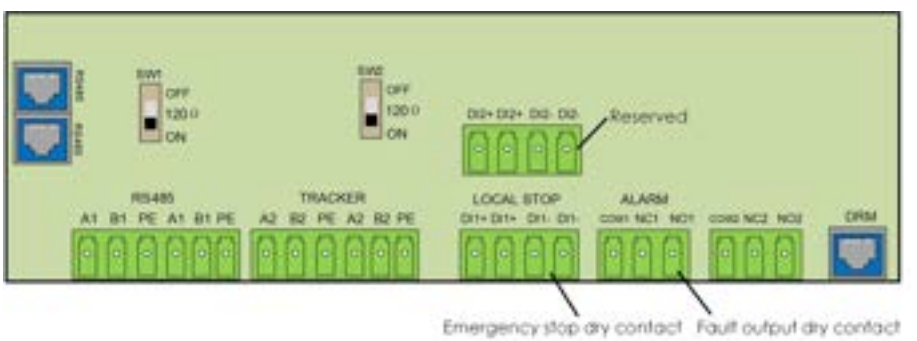

DO terminal (fault output dry contact): The relay can be set to output fault alarms, and user can configure it to be a normally open contact (COM & NO) or a normally closed contact (COM & NC).
The relay is initially at the NC terminal, and it will trip to another contact when a fault occurs. When alarm occurs, signal status change will not be triggered.
Use LED indicators or other equipment to indicate whether the inverter is in the faulty state.
The following Figures show the typical applications of normally open contact and normally closed contact:

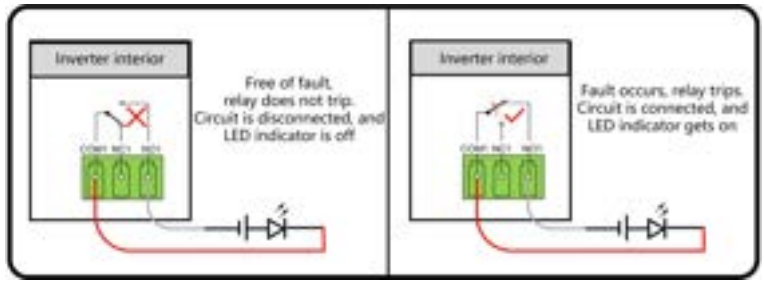

figure 5-8 Normal open contact

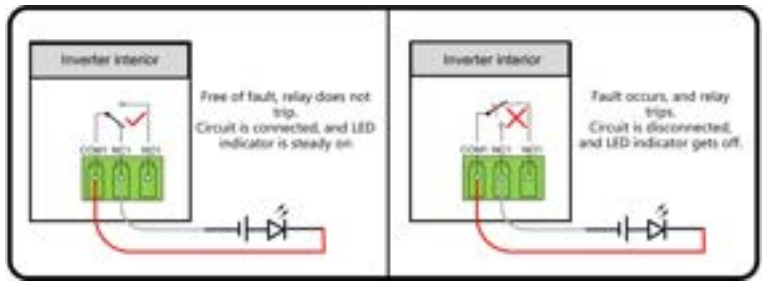

figure 5-9 Normal close contact

Devices connected to the relay should comply with related requirements:

AC-Side Requirements	DC-Side Requirements
Max. voltage: 125Vac	Max. voltage: 30Vdc
Max. current: 5A	Max. current: 5A

DI terminal (emergency stop dry contact): the dry contact can be configured to be an emergency stop contact. Use either of the following methods for configuration.

Method 1：When the DI + contact and DI-contact are shorted by external controlled switch (The external switch can be configured as normally open contact or normally closed contact), the inverter will immediately shutdown.

Method 2：Passive Valid can be set. When Passive Valid is enabled on the iSolarCloud, the inverters will operate normally when DI + contact and DI-contact are shorted by external controlled switch, and the inverters will emergently stop when DI + contact and DI- contact are disconnected.

The dry contacts only support passive switch signal input.

The following figure shows the typical application of local stop dry contact.

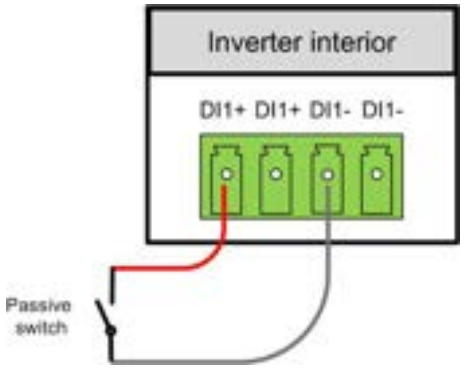

figure 5-10 Local stop contact

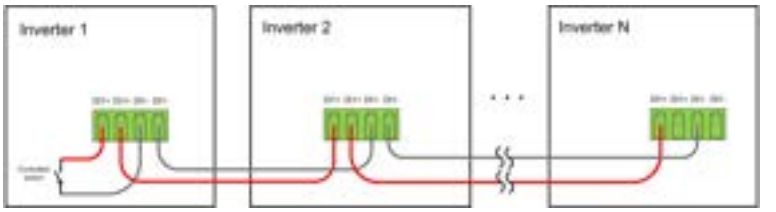

figure 5-11 Daisy chain topology

When wiring DI dry contacts, ensure that the maximum wiring distance meet the requirements in "10.2 Wring Distance of DI Dry Contact".

5.10.2 Wiring Procedure

Refer to the wiring of terminal block described in chapter"5.9.3 Connection Procedure(Terminal Block)" to implement fault output, emergency shutdown. For emergency shutdown(passive valid), enable the function on iSolarCloud, refer to "7.8.2 Operation Parameters".

5.11 DRM Connection（For Countries “AU” and “NZ”）

5.11.1 DRM Function

The inverter supports the demand response modes as specified in the standard AS/NZS 4777. The inverter has integrated a terminal for connecting to a DRED. After the connection, the method of asserting DRMs as specified in the follow table.

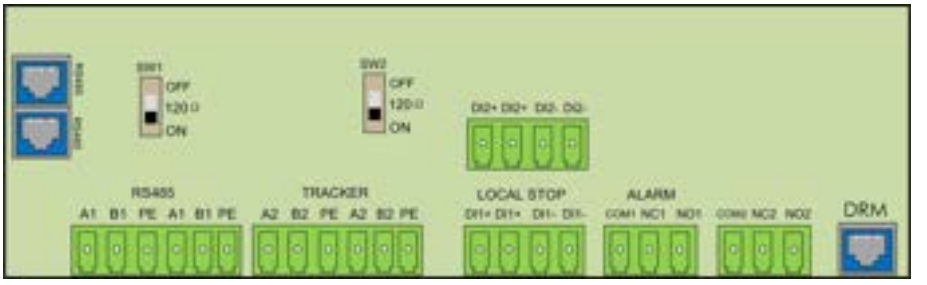

The mode DRM0 is supported by the inverter.

table 5-5 Method of Asserting DRMs

Mode	Method of Asserting
DRM0	Asserted by shorting pins 5 and 6
	Asserted when the impedance between pins 5 and 6 is detected to be above 20 kΩ

Enable the DRM function through the iSolarCloud App. If there are any problems, contact SUNGROW.

The DRM function is only applicable to devices for Australia and New Zealand.

5.11.2 Connection Procedure

step 1 Strip the insulation layer of the Ethernet cable with a wire stripper, and insert the signal wires to the RJ45 connector. Crimp the RJ45 connector with a crimping tool.

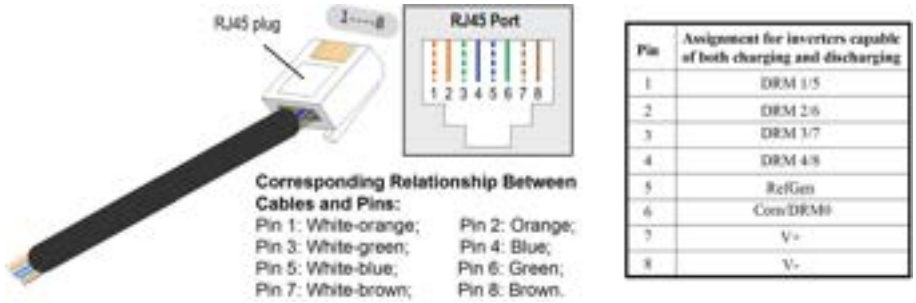

step 2 Loosen the swivel nut and select an appropriate seal according to cable outer diameter. Lead the cable through the swivel nut, and seal successively.



Outer Diameter D (mm)	Seal
4.5 ~ 6	c
6 ~ 12	a + b
13 ~ 18	b

step 3 Insert the RJ45 connector to the RJ45 jack.

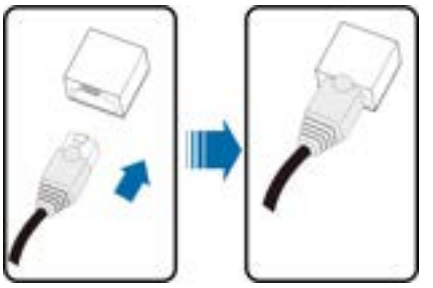

step 4 Pull the cable gently to make sure it is secured, tighten the swivel nut clockwise.

- - End

5.12 Closing the Wiring Compartment

step 1 Release the limit lever.



step 2 Close the wiring compartment and tighten the two screws on its front cover with supplied Allen wrench.

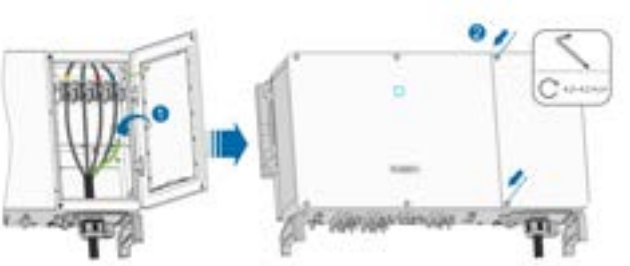

- - End

5.13 Communication Module Connection (optional)

Connect the communication module produced by SUNGROW to the communication accessory port. After successful connection, information such as power generation and running state of the inverter can be viewed via the APP on the phone.



*The image shown here is for reference only. The actual product you receive may differ.

NOTICE

Once the communication module is in use, do not connect the inverter to a 3rd party data logger at the same time via RS485.

For details on module installation and configuration, refer to the manual delivered together with the module.

6 Commissioning

6.1 Inspection before Commissioning

Check the following items before starting the inverter:

- All equipment has been reliably installed.
- DC switch(es) and AC circuit breaker are in the "OFF" position.
- The ground cable is properly and reliably connected.
- The AC cable is properly and reliably connected.
- The DC cable is properly and reliably connected.
- The communication cable is properly and reliably connected.
- The vacant terminals are sealed.
- No foreign items, such as tools, are left on the top of the machine or in the junction box (if there is).
- The AC circuit breaker is selected in accordance with the requirements of this manual and local standards.
- All warning signs & labels are intact and legible.

6.2 Commissioning Procedure

If all of the items mentioned above meet the requirements, proceed as follows to start up the inverter for the first time.

step 1 Connect the AC circuit breaker between the inverter and the grid.

step 2 Rotate the DC switch of the inverter to "ON" position.

step 3 Connect the DC switch (if applicable) between the inverter and the PV string.

step 4 Set initial protection parameters via the iSolarCloud App. For details, please refer to "7.2 Installing the App",and "7.4.2 Login Procedure". If the irradiation and grid conditions meet requirements, the inverter will normally operate.

step 5 Observe the LED indicator to ensure that the inverter operates normally. Refer to "2.4 LED Indicator" for details.

- - End

7 iSolarCloud App

7.1 Brief Introduction

The iSolarCloud App can establish communication connection to the inverter via the Bluetooth, thereby achieving near-end maintenance on the inverter. Users can use the App to view basic information, alarms, and events, set parameters, or download logs, etc.

*In case the communication module Eye, WiFi or WiNet-S is available, the iSolarCloud App can also establish communication connection to the inverter via the mobile data or WiFi, thereby achieving remote maintenance on the inverter.

- This manual describes only how to achieve near-end maintenance via the Bluetooth connection. For remote maintenance through the Eye, WiFi or WiNet-S, refer to the related manuals in the delivery scope.
- Screenshots in this manual are based on the Android system V2.1.6 , and the actual interfaces may differ.

7.2 Installing the App

Method 1

Download and install the App through the following application stores:

- MyApp (Android, mainland China users)
- Google Play (Android, users other than mainland China ones)
- App Store (iOS)

Method 2

Scan the following QR code to download and install the App according to the prompt information.

The App icon appears on the home screen after installation.

7.3 Function Overview

The App provides parameter viewing and setting functions, as shown in the following figure.



figure 7-1 App function tree map

7.4 Login

7.4.1 Requirements

The following requirements should be met:

- The AC or DC side of the inverter is powered-on.
- The mobile phone is within 5 meters away from the inverter and there are no obstructions in between.
- The Bluetooth function of the mobile phone is enabled.

7.4.2 Login Procedure

step 1 Open the App to enter the login page, tap **Local Access** at the bottom of the page to go to the next page.

step 2 Tap **Bluetooth**, after which the Bluetooth search screen pops up automatically, and select the to-be-connected inverter according the SN on the nameplate of the inverter. The Bluetooth indicator gets on once the connection is established. Alternatively, tap to scan the QR code on the side of the inverter to establish Bluetooth connection.



figure 7-2 Bluetooth Connection

step 3 Enter the login screen after the Bluetooth connection is established.



figure 7-3 Login

The username is “user”，and the initial password is "pw1111" or "111111" which should be changed for the consideration of account security.

To set inverter parameters related to grid protection and grid support, contact SUNGROW to obtain the advanced account and corresponding password.

step 4 If the inverter is not initialized, you will enter the quick setting screen of initializing protection parameter.



figure 7-4 Initialization Protection Parameter

NOTICE

Reset the protection parameters if the country setting is incorrect. Otherwise, a fault may occur.

In the European region, such as Sweden, Ireland, Hungary, Portugal, Romania, Greece, Ukraine etc. whose grid code complies with EN50549, select the parameter EN50549_1 (LV grid- connection) or EN50549_2 (MV grid-connection) with proper manual settings.

In the Brazilian region, set the country code as "Brazil". Selecting "Brazil_230" or "Brazil_240" will cause setting failure.

step 5 When the country is set to Australia, additionally set the applicable network service provider and then the grid type.Tap **Power Company** to select the correct power company.



figure 7-5 Initialization Power Company

The image shown here is for reference only. Refer to the actual interface for the supported network service providers.

table 7-1 Power Company Information

Network Service Provider	Grid Type
AS/NZS 4777.2:2015	/
AS/NZS 4777.2:2020 Australia A	/
AS/NZS 4777.2:2020 Australia B	/
AS/NZS 4777.2:2020 Australia C	/
ENERGEX & Ergon Energy	• STNW1170: single phase < 10 kVA & three phase < 30 kVA • STNW1174 :30 kVA < PN ≤ 1500 kVA
Endeavour Energy	MDI 0043
Ausgrid	NS194
Jemena	• ≤ 10kVA per phase (or 30 kVA per three phase) • ELE GU 0014: 30-200kVA
CitiPower & Powercor	• ≤ 5 kVA for single-phase & 30 kVA for three-phase • > 30 kVA three-phase
United Energy	• UE-ST-2008.1: ≤ 10 kW for single-phase & 30 kW for three-phase • UE-ST-2008.2: > 30 kVA three-phase
PowerWater	Embedded Generation Notice Photovoltaic Systems:2020

SA Power Networks	• TS129-2019: < 10 kW for single-phase & 30 kW for three-phase • TS130-2017: > 30 kW & ≤ 200 kW • TS131-2018: > 200 kW
Horizon Power	• HPC-9DJ-13-0001-2019: ≤ 10 kVA for single-phase & 30 kVA for three-phase • HPC-9DJ-13-0002-2019: > 30 kVA & ≤1 MVA
westernpower	EDM # 33612889-2019
AusNet Services	Basic Micro Embedded Generation:2020

For compliance with AS/NZS 4777.2:2020, please select from Australia A/B/C. Please contact your electricity grid operator for which region to use.

step 6 After finishing the settings, tap TUNR ON DEVICE at the upper right corner and the device will be initialized. The App will send start instructions and the device will start and operate.

step 7 If the inverter is initialized, the App automatically turns to its home page.

- - End

7.5 Home page

After login, the home page is as follows:



figure 7-6 Home Page

table 7-2 Home Page Description

No.	Designation	Description
1	Date and time	System date and time of the inverter.
2	Inverter state	Present operation state of the inverter. For details, refer to "table 7-3 Description of Inverter State".
3	PID state	Present state of the PID. For details, refer to "table 7-4 Description of PID State".
4	Power flow chart	Displays the PV power generation power, feed-in power, etc. The line with an arrow indicates energy flow between connected devices, and the arrow pointing indicates energy flow direction.
5	Power generation	Today power yield and accumulative power yield of the inverter.
6	Real-time power	Output power of the inverter.
7	Power curve	Shows the change of power between 5 am and 11 pm every day (Each point on the curve represents the percentage of present inverter power to rated power).
8	Navigation bar	Including "Home", "Run-info", "His-record", and "More".

table 7-3 Description of Inverter State

State	Description
Run	After being energized, the inverter tracks the PV arrays' maximum power point (MPP) and converts the DC power into AC power. This is the normal operation mode.
Stop	The inverter is stopped.
Press to Shut Down	The inverter will stop operation by manually "stop" via app. In this way, inverter internal DSP stops. To restart the inverter, manually start via app.
Standby	Inverter enters standby mode when DC side input is insufficient. In this mode the inverter will wait within the standby duration.
Initial standby	The inverter is in the initial power-on standby state.
Starting Up	The inverter is initializing and synchronizing with the grid.
Warn Run	Warning information is detected.
Derating running	The inverter derates actively due to environmental factors such as temperature or altitude
Dispatch Running	The inverter runs according to the scheduling instructions received from the monitoring background
Fault	If a fault occurs, the inverter will automatically stop operation, and disconnect the AC relay. The fault information will be displayed in the app. Once the fault is removed in recovery time, the inverter will automatically resume running.When the country setup is German HV, which is complied with VDE-AR-4120, the inverter will not be automatically connected to the grid after the fault is cleared, and needs to wait for an external signal to trigger reconnection.

table 7-4 Description of PID State

State	Description
PID recovery running	The inverters perform PID recovery actively.
PID abnormity	It is detected that the ISO impedance is abnormal or the PID cannot work normally after the PID being enabled.

If the inverter is running abnormally, the alarm or fault icon will be displayed in the lower right corner of the inverter icon in power flow chart. The user can tap this icon to enter the alarm or fault screen to view detailed information and corrective measures.

7.6 Run Information

Tap **Run Information** on the navigation bar to enter the screen showing running information, slide the screen upwards to view all detailed information.

table 7-5 Run Information

Classification	Parameter	Description
PV Information	String n Voltage	The input voltage of the nth string
	String n current	The input current of the nth string
Inverter Information	Total On-grid Running Time	/
	Daily On-grid Running Time	/
	Negative Voltage to Ground	Inverter DC side negative to ground voltage value
	Bus Voltage	Voltage between the positive and negative poles of the DC side of the inverter
	Internal Air Temperature	/
	Array Insulation Resistance	Insulation resistance value of the input side to the protection ground
	Country Information	/
	Power Limitation Mode	/
	Reactive Power Mode	/
Input	Total DC Power	DC side total input power
	MPPT x Voltage	The input voltage of the xth MPPT
	MPPT x Current	The input current of the xth MPPT
Output	Daily Yield	/
	Monthly Yield	/
	Annual Yield	/
	Total Active Power	Current active power value of the inverter
	Total Reactive Power	Current reactive power value of the inverter
	Total Apparent Power	Current apparent power value of the inverter
	Total Power Factor	Power factor of the AC side of the inverter
	Gird Frenquency	Frequency of the AC side of the inverter
	A-B Line Voltage	Line Voltage

Classification	Parameter	Description
	B-C Line Voltage	
	C-A Line Voltage	
	Phase A Current	
	Phase B Current	Phase Current
	Phase C Current	

7.7 Records

Tap **Records** on the navigation bar to enter the screen showing event records, as shown in the following figure.



figure 7-7 Records

Fault Alarm Record

Tap **Fault Alarm Record** to enter the screen, as shown in the following figure.



figure 7-8 Fault Alarm Record

Click to select a time segment and view corresponding records.

The inverter can record up to 400 latest entries.

Select one of the records in the list and click the record, to view the detailed fault info as shown in following figure.



figure 7-9 Detailed Fault Alarm Information

Yield Record

Tap **Yield Record** to enter the screen showing daily power generation , as shown in the following figure.



figure 7-10 Power Curve

The App displays power generation records in a variety of forms, including daily power generation graph, monthly power generation histogram, annual power generation histogram and total power generation histogram.

table 7-6 Explanation of Power Yields Records

Parameter	Description
Power curve	Shows the power output from 5 am to 11 pm in a single day. Each point on the curve is the percentage of present power to rated power.
Daily energy histogram	Shows the power output every day in the present month.

Parameter	Description
Monthly energy histogram	Shows the power output every month in a year.
Annual energy histogram	Shows the power output every year.

Tap the time bar on the top of the screen to select a time segment and view the corresponding power curve.

Swipe left to check the power yields histogram.

Event Record

Tap **Event Record** to view event record list.

Click to select a time segment and view corresponding records.

The inverter can at most record the latest 400 events.

7.8 More

Tap **More** on the navigation bar to enter the corresponding screen, as shown in the following figure.



figure 7-11 More

7.8.1 System Parameters

Tap **Settings→System Parameters** to enter the corresponding screen, as shown in the following figure.

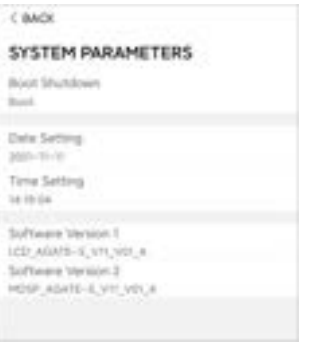

figure 7-12 System Parameters

Boot/Shutdown

Tap **Boot/Shutdown** to send the boot/shutdown instruction to the inverter.

For Australia and New Zealand, when the DRM state is DRM0, the "Boot" option will be prohibited.

Date Setting/Time Setting

The correct system time is very important. Wrong system time will directly affect the data logging and power generation value. The clock is in 24-hour format.

Software Version

Version information of the current firmware.

7.8.2 Operation Parameters

Running Time

Tap **Settings→Operation Parameters→Running Time** to enter the corresponding screen, on which you can set "Running Time".



figure 7-13 Running Time

PID Parameters

Tap **Settings→Operation Parameters→PID Parameters** to enter the corresponding screen, on which you can set "PID Parameters".



figure 7-14 PID Setting

table 7-7 PID Parameter Description

Parameter	Description
PID Recovery	Set enabling/disabling of the PID night recovery function. PID night recovery function operates between 22:00 pm and 5:00 am by default.
Clear PID alarm	If ISO impedance abnormality or PID function exception is detected during running of the PID function, the inverter reports a PID false alarm and reminds the user to take corresponding measures. After processing, clear the alarm via this parameter.
PID Scheme	Apply negative or positive voltage.

After the PID night recovery function is enabled, the fault indicator on the inverter front panel turns green.

AFCI Parameters(Optional)

Tap **Settings→Operation Parameters→AFCI Parameters** to enter the corresponding screen, on which you can set **AFCI Parameters**.



figure 7-15 AFCI Setting

NS Protection (Passive Valid)

Tap **Settings→Operation Parameters→Regular Parameters** to enter the corresponding screen, on which you can set the **NS Protection(Passive Valid)**.



figure 7-16 NS Protection(Passive Valid)

7.8.3 Power Regulation Parameters

Active Power Regulation

Tap **Settings→Power Regulation Parameters→Active Power Regulation** to enter the screen, as shown in the following figure.

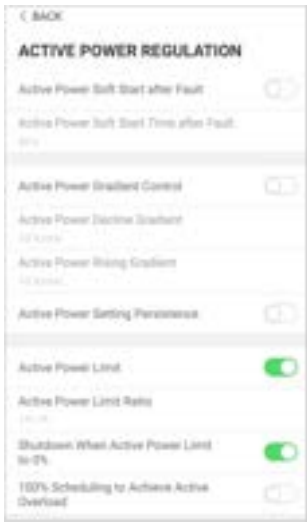

figure 7-17 Active Power Regulation

table 7-8 Active Power Regulation

Parameter	Definition/Setting Description	Range
Active power soft start after fault	The switch for enabling/disabling the soft start function after a fault occurs.	Enable/Disable
Active power soft start time after fault	Time that the soft start takes to raise the power from 0 to 100% rated power.	1s~1200s
Active power gradient control	Switch for enabling/disabling the active power rate settable function.	Enable/Disable
Active power decline gradient	The decline rate of inverter active power per minute.	3%/min~6000%/min

Parameter	Definition/Setting Description	Range
Active power rising gradient	The rise rate of inverter active power per minute.	3%/min~6000%/min
Active power setting persistence	Switch for enabling/disabling the function of saving output limited power.	Enable/Disable
Active power limit	The switch for limiting output power.	Enable/Disable
Active power limit ratio	The ratio of limiting output power to rated power in percentage.	0%~110%
Shutdown when active power limit to 0%	Switch used to determine whether the inverter is in stop state when the limited power reaches 0.	Enable/Disable

Reactive Power Regulation

Tap **Settings→Power Regulation Parameters→Reactive Power Regulation** to enter the screen, as shown in the following figure.



figure 7-18 Reactive Power Regulation

table 7-9 Reactive Power Regulation

Parameter	Definition/Setting Description	Range
Reactive power generation at night	Switch for enabling/disabling Q at night function.	Enable/Disable
Reactive power ratio at night	Reactive power ratio set for the Q at night function.	-100%~0%/ 0%~100%
Reactive power setting persistence	Switch for enabling/disabling the power-off function during reactive power.	Enable/Disable
Reactive power regulation mode	—	Off/PF/Qt/Q(P)/Q(U)
Reactive power regulation	Switch for enabling/disabling reactive response function.	Enable/Disable
Reactive power regulation time	Ends time of reactive response.	0.1s~600.0s
Q(P)Curve	Select corresponding curve according to local regulations	Curve A/Curve B/Curve C*
QP_P1	Output power at P1 on the Q (P) mode curve (in percentage)	10.0%~100.0%
QP_P2	Output power at P2 on the Q (P) mode curve (in percentage)	20.0%~100.0%

Parameter	Definition/Setting Description	Range
QP_P3	Output power at P3 on the Q (P) mode curve (in percentage)	20.0%~100.0%
QP_K1	Power factor at P1 on the Q(P) mode curve	Curve A/Curve C:0.800~1.000 Curve B: [-0.600~0.600]*Active Overload Rate/1000
QP_K2	Power factor at P2 on the Q(P) mode curve	Curve A/Curve C: 0.800~1.000 Curve B: [-0.600~0.600]*Active Overload Rate/1000
QP_K3	Power factor at P3 on the Q(P) mode curve	Curve A/Curve C: 0.800~1.000 Curve B: [-0.600~0.600]*Active Overload Rate/1000
QP_EnterVoltage	Voltage percentage for Q(P) function activation	100.0%~110.0%
QP_ExitVoltage	Voltage percentage for Q(P) function deactivation	90.0%~100.0%
QP_EXitPower	Power percentage for Q(P) function deactivation	1.0%-20.0%
QP_EnableMode	Unconditional activation/deactivation of Q(P) function	Yes/No
Q(U)Curve	Select the corresponding curve according to local regulations	Curve A/Curve B/Curve C*
QU_V1	Pre-set grid voltage U1 that is reactive according to the grid voltage	80.0%~100.0%
QU_Q1	Pre-set proportion of reactive power according to the grid voltage U1	[-60.0%-0]* Overload Rate/1000

Parameter	Definition/Setting Description	Range
QU_V2	Pre-set grid voltage U2 that is reactive according to the grid voltage.	80.0%~100.0%
QU_Q2	Pre-set proportion of reactive power according to the grid voltage U2.	[-60.0%-60.0%]* Overload Rate/1000
QU_V3	Pre-set grid voltage U3 that is reactive according to the grid voltage.	100.0%~120.0%
QU_Q3	Pre-set proportion of reactive power according to the grid voltage U3.	[-60.0%-60.0%]* Overload Rate/1000
QU_V4	Pre-set grid voltage U4 that is reactive according to the grid voltage.	100.0%~120.0%
QU_Q4	Pre-set proportion of reactive power according to the grid voltage U4.	[0-60.0%]* Overload Rate/1000
QU_EnterPower	Active power for Q(U) function activation	20.0%~100.0%
QU_EXitPower	Active power for Q(U) function deactivation	1.0%~20.0%
QU_EnableMode	Unconditional activation/deactivation of Q(U) function	Yes/No/Yes,Limited by PF
QU_Limited PF Value	—	0-0.95

**Curve C is reserved and consistent with Curve A currently.

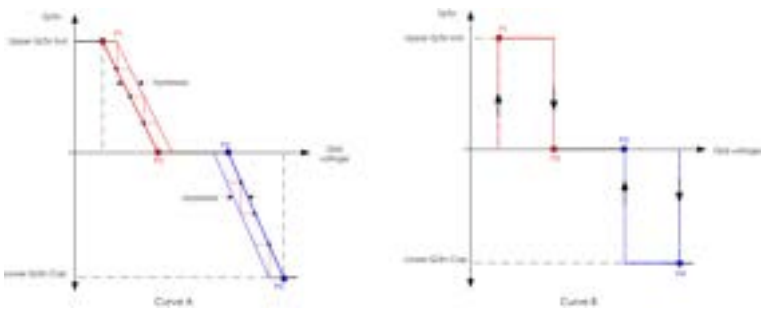

figure 7-19 Q(U) Curve

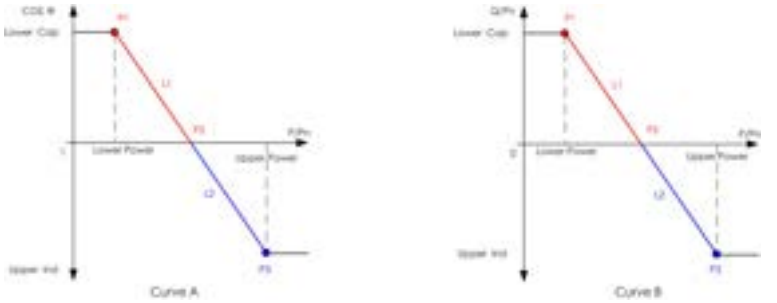

figure 7-20 Q(P) Curve

7.8.4 Communication Parameters

Tap **Settings→Communication Parameters→Serial Port Parameters** to enter the corresponding interface, as shown in the following figure.



figure 7-21 Serial Port Parameters

table 7-10 Serial Port Parameters

Parameter	Range
Device Address	1–246

MPLC Parameters

Tap **Settings→Communication Parameters→MPLC Parameters** to enter the corresponding interface, as shown in the following figure.

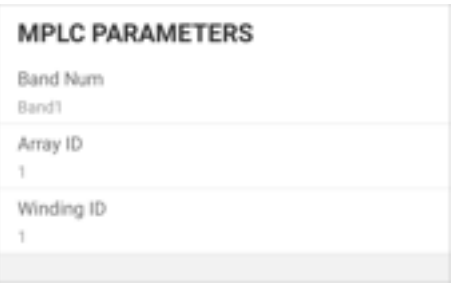

figure 7-22 MPLC Parameters

table 7-11 MPLC Parameters

Parameter	Range
Band Num	Band1, Band2
Array ID	1–255
Winding ID	1–10

7.8.5 Firmware Update

To avoid download failure due to poor on-site network signal, it is recommended to download the firmware package to the mobile device in advance.

Perform firmware update only during high irradiance conditions in order to prevent equipment failure.

step 1 Enable the "Mobile data" of the mobile device.

step 2 Open the App, enter the account and password on the login screen. Tap **Login** to enter the home screen.

step 3 Tap **More→Firmware Download** to enter corresponding screen on which you can view the device list.

step 4 Select the device model before downloading the firmware. Tap the device name in the device list to enter the firmware upgrade package detail interface, and tap behind the firmware upgrade package to download it.



step 5 Return to the **Firmware Download** screen, tap in the upper right corner of the screen to view the downloaded firmware upgrade package.

step 6 Login the App via local access mode. Refer to "7.4 Login".

step 7 Tap **More** on the App home screen and then tap **Firmware Update**.

step 8 Tap the upgrade package file, a prompt box will pop up asking you to upgrade the firmware with the file, tap **CONFIRM** to perform the firmware upgrade.



step 9 Wait for the file to be uploaded. When the upgrade is finished, the interface will inform you of the upgrade completion. Tap **Complete** to end the upgrade.



- - End

7.8.6 Password Changing

Tap **Modify Password** to enter the modify password screen, as shown in the following figure.



figure 7-23 Change Password

The password shall consisit of 8–20 digits, including letters and numbers.

8 System Decommissioning

8.1 Disconnecting the Inverter

For maintenance or other service work, the inverter must be switched off.

Proceed as follows to disconnect the inverter from the AC and DC power sources. Lethal voltages or damage to the inverter will follow if otherwise.

step 1 Disconnect the external AC circuit breaker and secure it against reconnection.

step 2 Rotate the DC switch to the "OFF" position for disconnecting all of the PV string inputs.

step 3 Wait about 5 minutes until the capacitors inside the inverter completely discharge.

step 4 Ensure that the DC cable is current-free via a current clamp.

- - End

8.2 Dismantling the Inverter

⚠ CAUTION

Risk of burn injuries and electric shock!

Do not touch any inner live parts until for at least 5 minutes after disconnecting the inverter from the utility grid and the PV input.

Before dismantling the inverter, disconnect both AC and DC connections.

If there are more than two layers of inverter DC terminals, dismantle the outer DC connectors before dismantling the inner ones.

step 1 Refer to "5 Electrical Connection", for the inverter disconnection of all cables in reverse steps. In particular, when removing the DC connector, use an MC4 wrench to loosen the locking parts and install waterproof plugs.

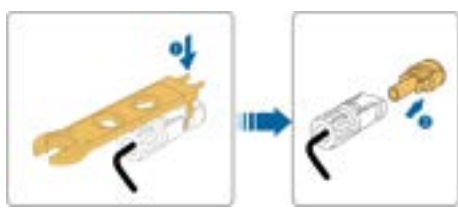

step 2 Refer to"4 Mechanical Mounting", to dismantle the inverter in reverse steps.

step 3 If necessary, remove the wall-mounting bracket from the wall.

step 4 If the inverter will be used again in the future, please refer to "3.2 Inverter Storage" for a proper conservation.

- - End

8.3 Disposal of the Inverter

Users take the responsibility for the disposal of the inverter.

NOTICE

Some parts and devices of the inverter, such as the capacitors, may cause environmental pollution.
Do not dispose of the product together with household waste but in accordance with the disposal regulations for electronic waste applicable at the installation site.

9 Troubleshooting and Maintenance

9.1 Troubleshooting

Once the inverter fails, the fault information can be displayed on the App interface. If the inverter is equipped with an LCD screen, the fault information can be viewed on it.

The fault codes and troubleshooting methods of all PV inverters are detailed in the table below. The device you purchase may only contain some of the fault information, and when the inverter fails, you can check the corresponding information through the fault codes from the mobile app.

Fault code	Fault name	Corrective measures
2, 3, 14, 15	Grid Overvoltage	Generally, the inverter will be reconnected to the grid after the grid returns to normal. If the fault occurs repeatedly: 1. Measure the actual grid voltage, and contact the local electric power company for solutions if the grid voltage is higher than the set value. 2. Check whether the protection parameters are appropriately set via the App or the LCD. Modify the overvoltage protection values with the consent of the local electric power operator. 3. Contact Sungrow Customer Service if the preceding causes are ruled out and the fault persists.
4, 5	Grid Undervoltage	Generally, the inverter will be reconnected to the grid after the grid returns to normal. If the fault occurs repeatedly: 1. Measure the actual grid voltage, and contact the local electric power company for solutions if the grid voltage is lower than the set value. 2. Check whether the protection parameters are appropriately set via the App or the LCD. 3. Check whether the AC cable is firmly in place. 4. Contact Sungrow Customer Service if the preceding causes are ruled out and the fault persists.

Fault code	Fault name	Corrective measures
8	Grid Overfrequency	Generally, the inverter will be reconnected to the grid after the grid returns to normal. If the fault occurs repeatedly: 1. Measure the actual grid frequency, and contact the local electric power company for solutions if the grid frequency is beyond the set range. 2. Check whether the protection parameters are appropriately set via the App or the LCD. 3. Contact Sungrow Customer Service if the preceding causes are ruled out and the fault persists.
9	Grid Underfrequency	
10	Grid Power Outage	Generally, the inverter will be reconnected to the grid after the grid returns to normal. If the fault occurs repeatedly: 1. Check whether the grid supplies power reliably. 2. Check whether the AC cable is firmly in place. 3. Check whether the AC cable is connected to the correct terminal (whether the live wire and the N wire are correctly in place). 4. Check whether the AC circuit breaker is connected. 5. Contact Sungrow Customer Service if the preceding causes are ruled out and the fault persists.
12	Excess Leakage Current	1. The fault can be caused by poor sunlight or damp environment, and generally the inverter will be reconnected to the grid after the environment is improved. 2. If the environment is normal, check whether the AC and DC cables are well insulated. 3. Contact Sungrow Customer Service if the preceding causes are ruled out and the fault persists.

Fault code	Fault name	Corrective measures
13	Grid Abnormal	Generally, the inverter will be reconnected to the grid after the grid returns to normal. If the fault occurs repeatedly: 1. Measure the actual grid, and contact the local electric power company for solutions if the grid parameter exceeds the set range. 2. Contact Sungrow Customer Service if the preceding causes are ruled out and the fault persists.
17	Grid Voltage Imbalance	Generally, the inverter will be reconnected to the grid after the grid returns to normal. If the fault occurs repeatedly: 1. Measure the actual grid voltage. If grid phase voltages differ greatly, contact the electric power company for solutions. 2. If the voltage difference between phases is within the permissible range of the local power company, modify the grid voltage imbalance parameter through the App or the LCD. 3. Contact Sungrow Customer Service if the preceding causes are ruled out and the fault persists.
28, 29, 208, 448-479	PV Reserve Connection Fault	1. Check whether the corresponding string is of reverse polarity. If so, disconnect the DC switch and adjust the polarity when the string current drops below 0.5 A. 2. Contact Sungrow Customer Service if the preceding causes are ruled out and the fault persists. *The code 28 to code 29 are corresponding to PV1 to PV2 respectively. *The code 448 to code 479 are corresponding to string 1 to string 32 respectively.

Fault code	Fault name	Corrective measures
532-547, 564-579	PV Reverse Connection Alarm	1. Check whether the corresponding string is of reverse polarity. If so, disconnect the DC switch and adjust the polarity when the string current drops below 0.5 A. 2. Contact Sungrow Customer Service if the preceding causes are ruled out and the alarm persists. *The code 532 to code 547 are corresponding to string 1 to string 16 respectively. *The code 564 to code 579 are corresponding to string 17 to string 32 respectively.
548-563, 580-595	PV Abnormal Alarm	Check whether the voltage and current of the inverter is abnormal to determine the cause of the alarm. 1. Check whether the corresponding module is sheltered. If so, remove the shelter and ensure module cleanness. 2. Check whether the battery board wiring is loose, if so, make it reliably connected. 3. Check if the DC fuse is damaged. If so, replace the fuse. 4. Contact Sungrow Customer Service if the preceding causes are ruled out and the alarm persists. *The code 548 to code 563 are corresponding to string 1 to string 16 respectively. *The code 580 to code 595 are corresponding to string 17 to string 32 respectively.

Fault code	Fault name	Corrective measures
37	Excessively High Ambient Temperature	Generally, the inverter will resume operation when the internal or module temperature returns to normal. If the fault persists: 1. Check whether the ambient temperature of the inverter is too high; 2. Check whether the inverter is in a well-ventilated place; 3. Check whether the inverter is exposed to direct sunlight. Shield it if so; 4. Check whether the fan is running properly. Replace the fan if not; 5. Contact Sungrow Power Customer Service if the fault is due to other causes and the fault persists.
43	Excessively Low Ambient Temperature	Stop and disconnect the inverter. Restart the inverter when the ambient temperature rises within the operation temperature range.
39	Low System Insulation Resistance	Wait for the inverter to return to normal. If the fault occurs repeatedly: 1. Check whether the ISO resistance protection value is excessively high via the app or the LCD, and ensure that it complies with the local regulations. 2. Check the resistance to ground of the string and DC cable. Take corrective measures in case of short circuit or damaged insulation layer. 3. If the cable is normal and the fault occurs on rainy days, check it again when the weather turns fine. 4. Contact Sungrow Customer Service if the preceding causes are ruled out and the fault persists.

Fault code	Fault name	Corrective measures
106	Grounding Cable Fault	1. Check whether the AC cable is correctly connected. 2. Check whether the insulation between the ground cable and the live wire is normal. 3. Contact Sungrow Customer Service if the preceding causes are ruled out and the fault persists.
88	Electric Arc Fault	1. Disconnect the DC power supply, and check whether any DC cable is damaged, the connection terminal or fuse is loose or there is a weak contact. If so, replace the damaged cable, fasten the terminal or fuse, and replace the burnt component. 2. After performing step 1, reconnect the DC power supply, and clear the electric arc fault via the App or the LCD, after that the inverter will return to normal. 3. Contact Sungrow Customer Service if the fault persists.
84	Reverse Connection Alarm of the Meter/CT	1. Check if the meter is wrongly connected. 2. Check if the input and output wiring of the meter is reversed. 3. If the existing system is enabled, please check if the rated power setting of the existing inverter is correct.
514	Meter Communication Abnormal Alarm	1. Check whether the communication cable and the terminals are abnormal. If so, correct them to ensure reliable connection. 2. Reconnect the communication cable of the meter. 3. Contact Sungrow Customer Service if the preceding causes are ruled out and the alarm persists.
323	Grid Confrontation	1. Check whether the output port is connected to actual grid. Disconnect it from the grid if so. 2. Contact Sungrow Customer Service if the preceding causes are ruled out and the fault persists.

Fault code	Fault name	Corrective measures
75	Inverter Parallel Communication Alarm	1. Check whether the communication cable and the terminals are abnormal. If so, correct them to ensure reliable connection. 2. Reconnect the communication cable of the meter. 3. Contact Sungrow Customer Service if the preceding causes are ruled out and the alarm persists.
7, 11, 16, 19–25, 30–34, 36, 38, 40–42, 44–50, 52–58, 60–68, 85, 87, 92, 93, 100–105, 107–114, 116–124, 200–211, 248–255, 300–322, 324–326, 401–412, 600–603, 605, 608, 612, 616, 620, 622–624, 800, 802, 804, 807, 1096–1122	System Fault	Wait for the inverter to return to normal. Disconnect the AC and DC switches, and reconnect the AC and DC switches 15 minutes later to restart the inverter. If the fault still exists, contact Sungrow Customer Service.

Fault code	Fault name	Corrective measures
59, 70–72, 74, 76, 82, 83, 89, 77–81, 216–218, 220–231, 432–434, 500–513, 515–518, 900, 901, 910, 911	System Alarm	1. The inverter can continue running. 2. Check whether the related wiring and terminal are abnormal, check whether there are any foreign materials or other environmental abnormalities, and take corresponding corrective measures when necessary. If the fault persists, please contact Sungrow Power Customer Service.
264-283	MPPT Reverse Connection	1. Check whether the corresponding string is of reverse polarity. If so, disconnect the DC switch and adjust the polarity when the string current drops below 0.5 A. 2. Contact Sungrow Customer Service if the preceding causes are ruled out and the fault persists. *The code 264 to code 279 are corresponding to string 1 to string 20 respectively.
332-363	Boost Capacitor Overvoltage Alarm	1. The inverter can continue running. 2. Check whether the related wiring and terminals are abnormal, check whether there are any foreign materials or other environmental abnormalities, and take corresponding corrective measures when necessary. If the fault persists, please contact Sungrow Power Customer Service.

Fault code	Fault name	Corrective measures
364-395	Boost Capacitor Over-voltage Fault	Disconnect the AC and DC switches, and re-connect the AC and DC switches 15 minutes later to restart the inverter. If the fault still exists, contact Sungrow Customer Service.
1548-1579	String Current Reflux	1. Check whether the number of PV modules of the corresponding string is less than other strings. If so, disconnect the DC switch and adjust the PV module configuration when the string current drops below 0.5 A. 2. Check whether the PV module is shaded; 3. Disconnect the DC switch to check whether the open circuit voltage is normal when the string current drops below 0.5 A. If so, check the wiring and configuration of the PV module, 4. Check whether the orientation of the PV module is abnormal.

9.2 Maintenance

9.2.1 Maintenance Notices

⚠ DANGER

Risk of inverter damage or personal injury due to incorrect service!

- **Always keep in mind that the inverter is powered by dual sources: PV strings and utility grid.**

Before any service work, observe the following procedure.

- **Disconnect the AC circuit breaker and then set the DC load-break switch of the inverter to OFF;**
- **Turn the DC switch from ON to OFF and continue to turn it 20 degrees counter-clockwise, the DC switch can be locked here. (For countries "AU" and "NZ")**
- **Wait at least 5 minutes for inner capacitors to discharge completely;**
- **Verify that there is no voltage or current before pulling any connector.**

⚠ CAUTION

Keep non-related persons away!

A temporary warning sign or barrier must be posted to keep non-related persons away while performing electrical connection and service work.

NOTICE

Restart the inverter only after removing the fault that impairs safety performance.
As the inverter contains no component parts that can be maintained, never arbitrarily replace any internal components.
For any maintenance need, please contact SUNGROW. Otherwise, SUNGROW shall not be held liable for any damage caused.

Servicing of the device in accordance with the manual should never be undertaken in the absence of proper tools, test equipments or the latest revision of the manual which has been clearly and thoroughly understood.

9.2.2 Routine Maintenance

Item	Method	Period
System clean	Check the temperature and dust of the inverter. Clean the inverter enclosure if necessary. Check if the air inlet and outlet are normal. Clean the air inlet and outlet, if necessary.	Six months to a year (depend on the dust contents in air.)
Fans	Check whether there is fan warning using App. Check whether there is any abnormal noise when the fan is turning. Clean or replace the fans if necessary (see the following section).	Once a year
Cable entry	Check whether the cable entry is insufficiently sealed or the gap is excessively large, and reseal the entry when necessary.	Once a year
Electrical Connection	Check whether all cable are firmly connected in place. Check whether a cable is damaged, especially the part contacting the metal enclosure.	Six months to a year

9.2.3 Cleaning Air Inlet and Outlet

A significant amount of heat is generated when the inverter is working.
In order to maintain good ventilation, please check to make sure the air inlet and outlet are not blocked.

Clean the air inlet and outlet with soft brush or vacuum cleaner if necessary.

9.2.4 Fan Maintenance

DANGER

- **Stop the inverter and disconnect it from all power supplies before maintenance.**
- **Lethal voltage still exists in the inverter. Please wait for at least 5 minutes and then perform maintenance work.**
- **Only qualified electricians can maintain the fans.**

Fans inside the inverter are used to cool the inverter during operation. If the fans do not operate normally, the inverter may not be cooled down and inverter efficiency may decrease. Therefore, it is necessary to clean dirty fans and replace the broken fans in a timely manner.

The operation procedure is as follows:

step 1 Stop the inverter (see 8.1 Disconnecting the Inverter).

step 2 Loosen the screw on the sealing plate of the fan module.

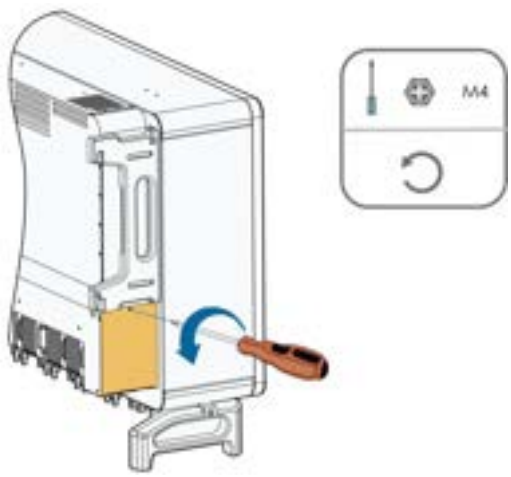

step 3 Press the tab of the latch hook, unplug the cable connection joint outwards, and loosen the screw on the fan holder.

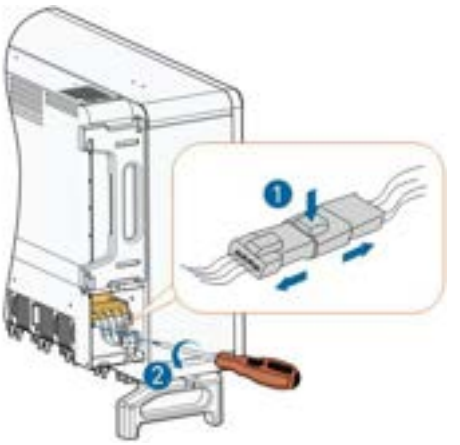

step 4 Pull out the fan module, clean the fans with soft brush or vacuum cleaner, and replace them when necessary.

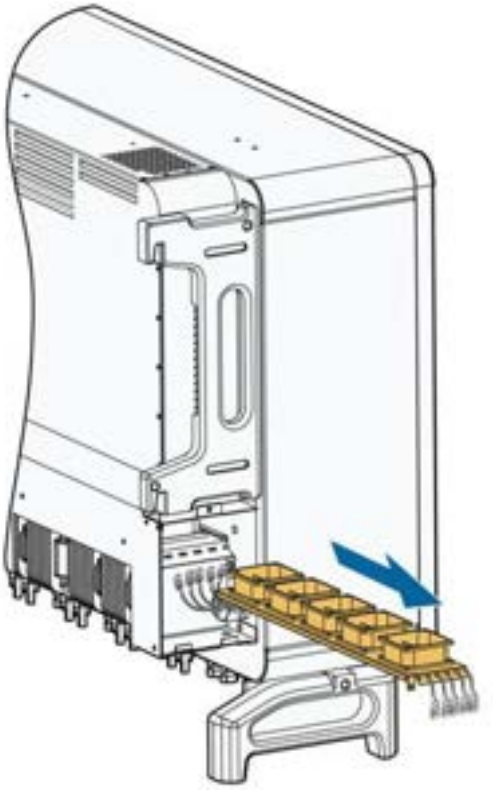

step 5 Reinstall the fan back to the inverter in reverse order and restart the inverter.

- - End

10 Appendix

10.1 Technical Data

Parameters	SG110CX
Input (DC)	
Recommended max. PV input power	147 kW
Max. PV input voltage	1100 V*
Min.PV input voltage/Start-up input voltage	200 V / 250 V
Nominal input voltage	585 V
MPP voltage range	200 – 1000 V
No. of independent MPP inputs	9
No. of PV strings per MPPT	2
Max. PV input current	234 A (26 A / 26 A / 26 A / 26 A / 26 A / 26 A / 26 A / 26 A / 26 A)
Max. DC short-circuit current	360 A (40 A / 40 A / 40 A / 40 A / 40 A / 40 A / 40 A / 40 A / 40 A)
Output (AC)	
AC output power	110 kVA @ 45 ℃ / 100 kVA @ 50 ℃
Rated AC output apparent power	100 kVA
Max. AC output current	158.8 A
Nominal AC voltage	3 / N / PE，230 / 400 V
AC voltage range	320 – 460 V
Nominal grid frequency / Grid frequency range	50 Hz / 45 – 55 Hz 60 Hz / 55 – 65 Hz
Harmonic (THD)	< 3 % (at nominal power)
Power factor at nominal power / Adjustable power factor	>0.99 / 0.8 leading – 0.8 lagging
Feed-in phases / AC connection	3 / 3–PE
Efficiency	
Max. efficiency / European efficiency	98.7% / 98.5%
Protection and Function	
DC reverse polarity protection	Yes
AC short-circuit protection	Yes
Leakage current protection	Yes
Grid monitoring	Yes

Parameters	SG110CX
Ground fault monitoring	Yes
DC switch	Yes
AC switch	No
PV string monitoring	Yes
Q at night function	Yes
PID recovery function	Yes
Arc fault circuit interrupter (AFCI)	Optional
DC terminal protective cover	Yes(Only for “AU”)
Communication dongle (EyeM4)	Yes(Only for “AU”)
Surge protection	DC Type II / AC Type II
General Data	
Dimensions (W*H*D)	1051 * 660 * 362.5 mm
Weight	89 kg
Topology	Transformerless
Ingress protection rating	IP66
Night power consumption	< 2 W
Operating ambient temperature range	-30 to 60 ℃ (> 50 ℃ derating)
Allowable relative humidity range	0–100%
Cooling method	Smart forced air cooling
Max. operating altitude	4000 m (> 3000 m derating)
Display	LED, Bluetooth + APP
Communication	RS485/ Optional: WLAN, Ethernet
DC connection type	MC4 (Max. 10 mm^2 optional)
AC connection type	OT or DT terminal (Max.240 mm^2)
Grid Support	Q at night function, LVRT, HVRT, active & reactive power control and power ramp rate control
Country of manufacture	China

* If the maximum DC voltage in the system can exceed 1000 V, the MC4 connectors included in the scope of delivery must not be used. In this case MC4 Evo2 connectors must be used.

10.2 Wring Distance of DI Dry Contact

The maximum wiring distance of DC dry contact must meet the requirements in the Table below. The wiring distance L is the total length of all DI signal cables.

$$L = 2\sum_{k=1}^{n} L_k$$

L_K refers to the cable length in one direction between the DI dry contact terminal of the kth inverter and the corresponding terminal of the $(k-1)^{th}$ inverter.

table 10-1 Correspondence between number of inverters and maximum wiring distance

Number of inverter	Maximum wiring distance(unit:m)	
	16AWG / 1.31mm²	17AWG / 1.026mm²
1	13030	10552
2	6515	5276
3	4343	3517
4	3258	2638
5	2606	2110
6	2172	1759
7	1861	1507
8	1629	1319
9	1448	1172
10	1303	1055
11	1185	959
12	1086	879
13	1002	812
14	931	754
15	869	703
16	814	660
17	766	621
18	724	586
19	686	555
20	652	528
21	620	502
22	592	480
23	567	459
24	543	440
25	521	422

NOTICE

In case the specification of the cable used is not included in the Table above, when there is only one inverter, ensure that the line impedance of the input node is less than 300Ω; and when there are multiple inverters connected in the daisy chain, ensure that the impedance is less than 300Ω/number of inverter.

10.3 Quality Assurance

When product faults occur during the warranty period, SUNGROW will provide free service or replace the product with a new one.

Evidence

During the warranty period, the customer shall provide the product purchase invoice and date. In addition, the trademark on the product shall be undamaged and legible. Otherwise, SUNGROW has the right to refuse to honor the quality guarantee.

Conditions

- After replacement, unqualified products shall be processed by SUNGROW.
- The customer shall give SUNGROW a reasonable period to repair the faulty device.

Exclusion of Liability

In the following circumstances, SUNGROW has the right to refuse to honor the quality guarantee:

- The free warranty period for the whole machine/components has expired.
- The device is damaged during transport.
- The device is incorrectly installed, refitted, or used.
- The device operates in harsh conditions beyond those described in this manual.
- The fault or damage is caused by installation, repairs, modification, or disassembly performed by a service provider or personnel not from SUNGROW.
- The fault or damage is caused by the use of non-standard or non-SUNGROW components or software.
- The installation and use range are beyond stipulations of relevant international standards.
- The damage is caused by unexpected natural factors.

For faulty products in any of above cases, if the customer requests maintenance, paid maintenance service may be provided based on the judgment of SUNGROW.

10.4 Contact Information

Should you have any question about this product, please contact us.

We need the following information to provide you the best assistance:

- Model of the device
- Serial number of the device
- Date of the device
- Fault code/name
- Brief description of the problem

China (HQ)	**Australia**
Sungrow Power Supply Co., Ltd	Sungrow Australia Group Pty. Ltd.
Hefei	Sydney
+86 551 65327834	+61 2 9922 1522
service@sungrowpower.com	service@sungrowpower.com.au
Brazil	**France**
Sungrow Do Brasil	Sungrow France
Sao Paulo	Lyon
+55 0800 677 6000	+33420102107
latam.service@sungrowamericas.com	service@sungrow-emea.com
Germany, Austria, Switzerland	**Greece**
Sungrow Deutschland GmbH	Service Partner – Survey Digital
Munich	+30 2391052757
+49 (0)89 1307 2620	service@sungrow-emea.com
service@sungrow-emea.com	
India	**Italy**
Sungrow (India) Private Limited	Sungrow Italy
Gurgaon	Verona
+91 080 41201350	+39 0800 974739 (Residential)
service@in.sungrowpower.com	+39 045 4752117 (Others)
	service@sungrow-emea.com
Japan	**Korea**
Sungrow Japan K.K.	Sungrow Power Korea Limited
Tokyo	Seoul
+ 81 3 6262 9917	+82 70 7719 1889
service@jp.sungrowpower.com	service@kr.sungrowpower.com

Malaysia	**Philippines**
Sungrow SEA	Sungrow Power Supply Co., Ltd
Selangor Darul Ehsan	Mandaluyong City
+60 19 897 3360	+63 9173022769
service@my.sungrowpower.com	service@ph.sungrowpower.com
Thailand	**Spain**
Sungrow Thailand Co., Ltd.	Sungrow Ibérica S.A.U.
Bangkok	Mutilva
+66 891246053	+34 948 05 22 04
service@th.sungrowpower.com	service@sungrow-emea.com
Romania	**Turkey**
Service Partner - Elerex	Sungrow Deutschland GmbH Turkey
service@sungrow-emea.com	Istanbul
	+90 216 663 61 80
	service@sungrow-emea.com
UK	**U.S.A, Mexico**
Sungrow Power UK Ltd.	Sungrow USA Corporation
Milton Keynes	Phoenix
+44 (0) 01908 414127	+1 833 747 6937
service@sungrow-emea.com	techsupport@sungrow-na.com
Vietnam	**Belgium, Netherlands and Luxembourg (Benelus)**
Sungrow Vietnam	+31 853 018 234 (only for Netherlands)
Hanoi	service@sungrow-emea.com
+84 918 402 140	
service@vn.sungrowpower.com	
Poland	
+48 221530484	-
service@sungrow-emea.com	